Ashcroft Ordering Handbook

ASHCROFT®
Trust the shield.®

Distribuidor Autorizado CALFER *soporte.tecnico2@calfer.com.mx*

CALFER DE MÉXICO®
CONTROLES AUTOMÁTICOS INDUSTRIALES

50 ANIVERSARIO

BULLETIN OH-2

ASHCROFT®
Trust the shield.™

Protecting our customers' people, processes and profits.

14 de enero de 2019

Atención: A quien corresponda

Por medio de la presente deseamos hacer de su conocimiento que **ASHCROFT INC**. nombro como distribuidor desde hace 24 años para la República Mexicana a:

GRUPO CALFER

CALFER DE MEXICO, S.A. DE C.V.
CALFER NAUCALPAN, S.A. DE C.V.
CONSTRUCTORA MEXICANA DE QUEMADORES, SA
CONTROLES ESPECIALES FRISA, SA DE CV

Para comercializador la línea completa de productos "Ashcroft - Heise", formando parte de nuestra exclusiva red de -Distribuidores Master- en la República Mexicana.

Sabemos de antemano el apoyo y servicio que esta empresa les ofrecerá, manteniendo así el prestigio internacional que caracteriza a nuestras marcas.

Dicha aseveración se respalda, en la cobertura a nivel nacional que tienen con sus sucursales, el material de stock que mantienen en ellas, los contratos realizados con otras empresas, así como el respaldo técnico que ofrece nuestra fábrica, apoyándolos con cursos y capacitación continua en toda la línea de productos "Ashcroft - Heise".

Sin otro particular por el momento, si no augurando fructíferas relaciones comerciales, quedo a sus órdenes.

Atentamente,

Lic. Karla J. Plaza Hernández
Territory Manager

TABLE OF CONTENTS

	Product Type		Page
	Trademarks	Trademarks, Service marks, Logos	4
PRESSURE GAUGES	**Process Gauges**	1279, 1377, 1379, 2462, Duragauge® Pressure Gauge	6-7
		1259,1290 Process Pressure Gauge	8-9
		1109, 1209 Pressure Gauge	10-11
		T5500, T6500, T5500E Pressure Gauge	12-13
		1187, 1188, 1189 Pressure Bellows Gauges	14-15
		Standard Pressure Ranges	16-18
	Industrial Gauges	2½″, 3½″ - 1009 Pressure Gauge	20-21
		4½″, 6″ - 1009 Pressure Gauge	22-23
		1008S 40 & 50mm Pressure Gauge	24-25
		1008S/SL 63mm - 100mm Pressure Gauge	26-27
		1008S/SL Pressure Gauge Center Back Connection	28-29
		2008 Panel Gauge	30-31
		1010, 1017, 1220 Pressure Gauges	32-33
		Standard Pressure Ranges	34
		1038A, 1339A Duplex Pressure Gauges	35
		1490 Low Pressure Diaphragm Gauges/1495 Receiver	36
		1490, 1495 , 1038A, 1039A Gauge Ranges	37
		Gauges Available Online (1020, 1122, 1150H)	38
	Commercial Gauges	8008 Pressure Gauge	40-41
		8008A Standard Pressure Ranges	42
		1008A/AL 63/100mm Pressure Gauges	43
		1008A Standard Pressure Ranges	44
		1005, 1005P & 1005S Pressure Gauges	45-46
		1007P-XUL Pressure Gauge	47
		1001T Panel Mount Pressure Gauge	48-49
		1001T-XOR, 1007P-XOR Refrigerant Pressure Gauges	50
		1000, 20171A Pressure Gauges	51
		12DDG, 15DDG, 23DDG Pressure Gauges	52
		Standard Commercial Pressure Gauge Ranges	53
	Digital Gauges	DG25 General Purpose Digital Gauge	56-57
		2074, 2174, 2274 Digital Pressure Gauges	58-59
		2084, 2086, 2089 Precision Digital Pressure Gauges	60-61
	Differential Gauges	1130, 1131, 1132, 1133 Differential Pressure Gauges	64-65
		1134 Differential Pressure Gauge	66
		1125, 1125A, 1127, 1128 Differential Pressure Gauges	67
		5503, 5509 Differential Pressure Gauges	68-69
		Standard Differential Pressure Gauge Ranges	70-71
	Sanitary Gauges	1032 Sanitary, 1032 Fractional Gauge	74-75
		1036 Sanitary Gauge, 1037 Fitting	76-77
		2030 Series Sanitary Gauges	78-79
		1032,1036 Series Sanitary Ranges	80
	Test Gauge	A4A Test Gauge	82-83
		1082 Test Gauge	84
		1084 Test Gauge	85
		Pressure Gauges General Information	86
PRESSURE SWITCHES	**Pressure Switches**	A Series Miniature Pressure Switches	88-91
		B4, B7, D4, D7, H4 Series Pressure Switches	92-96
		G, L, P Series Pressure Switches	97-101
		F-Series Pressure Switch	102-103
		DDS-Series Pressure Switch	104-105
		N-Series Pressure Switches	106-107
		Product Information	108-110

Distribuidor Autorizado CALFER
CALFER DE MÉXICO®
CONTROLES AUTOMÁTICOS INDUSTRIALES
50 ANIVERSARIO
www.calfer.com.mx 01 800 0125 742 /CalferMx
soporte.tecnico2@calfer.com.mx

TABLE OF CONTENTS	Product Type		Page
PRESSURE TRANSDUCERS	**Transducers/Transmitters**	A2, A4, A2X Pressure Transmitters	112-113
		G2, G3, T2 Pressure Transducers	114-115
		Transducer Pressure Ranges	116
		K1, KS, KX Pressure Transducers	117-118
		K2, K8 Pressure Transducers	119-120
		GC35 Pressure Transducer	121-122
		GC51 Pressure Transmitter	123-124
		GC31 Ultra-Compact Digital Transducer	125-126
	Differential Transducers	GC55 Pressure Transducer	128
		GC52 Differential Pressure Transmitter	129-130
		GC30 Ultra-Compact Digital Transducer	131-132
		GL42 Low Differential Indicating Pressure Transmitter	133-134
		RXLdp, XLdp, IXLdp Pressure Transmitters	135-136
		CXLdp Pressure Transmitter	137-138
		DXldp Pressure Transmitter	139-140
	Level Transducers	SL-17 Submersible Pressure Transmitter	142-143
		Transducers General Information	144-146
	Panel Meter	DM61 Panel Meter	148
DIAPHRAGM SEALS	**Threaded Seals**	100, 200, 300 Threaded Seals	150-151
		310-315 All-Welded Mini Threaded Seals	152
		311-312 All-Welded Midi Threaded Seals	153
		330 All-Welded Flush Threaded Seal	154
		510-511 All-Welded Threaded Seals	155
		400-401/500-501 All-Welded Threaded Seals	156-157
		740-741High Displacement Threaded Seals	158
	Isolation Rings	80, 81, 82 Isolation Rings	160-161
	Flanged Seals	102-103, 202-203, 302-303 Flanged Seals	164-165
		402-403, 702-703 Flanged Seals	166-168
		Flush Flanged DF Seals	169-170
	In-line Seals	104/204, 105/205, 106/206, 107/207, 108/208, In-Line	172-173
		320 Flush Quick Connect Seal	174
		Flange Ratings and Fill Fluids	175
		Diaphragm Seal Selection Information	176
TEMPERATURE INDICATORS	**Bimetals**	EI, CI, EL Bimetal Thermometer	178-179
		Bimetal Thermometer Information	180
	Gas Actuated	Duratemp® Remote Mounted Thermometer	182-183
		Duratemp® Direct Mounted Thermometer	184
		Duratemp® Remote Mounted Thermometers Information	185
	Thermowells	Thermowells	188
		Threaded Thermowell Ordering Code	189
		Flanged & Van Stone Thermowell Ordering Code	190
		Socket Weld & Weld In Thermowell Ordering Code	191
		Sanitary Thermowell Ordering Code	192
		Thermowell Dimension Drawings	193-195
	Temperature Switches	T4/T7 Series NEMA 4X, 7/9 Temperature Switches	198-199
		G, L, P Series NEMA 4 Temperature Switches	200-202
	RTD'S	AR10, AR20 RTDs	204
		AT10, AT20, AT30 Thermocouples	205

Distribuidor Autorizado CALFER
CALFER DE MÉXICO®
CONTROLES AUTOMÁTICOS INDUSTRIALES
50 ANIVERSARIO
www.calfer.com.mx 01 800 0125 742 /CalferMx
soporte.tecnico2@calfer.com.mx

TABLE OF CONTENTS	Product Type		Page
TEST INSTRUMENTS	**Calibrators**	ATE-2 Hand Held Calibrator	208
		AM2-1, AM2-2 Pressure Modules	209-211
		ST-2A Digital Indicator	212
		AQS-1 inH_2O, Gauge, Differential Pressure Modules	213
		AQS-2 Gauge, Absolute Pressure Modules	214
		PT-1 Pressure Tester	215
		PPT-1 inH_2O, Gauge, Differential Pressure Modules	216
		PPT-2 Absolute Pressure Modules	217
	Hand Pumps	DPPV-Kit, APOV-Kit, XHOV-Kit, AVC-1000, AVC-3000	218
	Hydraulic Testers	1305D, 1327CM, 1327D Deadweight Testers	219-220
ACCESSORIES	**Siphons**	1198 Finned Siphon	222
		1098 & 1100 Siphons	223
	Dampeners/Snubbers	1106 Pulsation Dampener & 1112 Pressure Snubber	224
	Valves/Pressure Limiting Valves	Gauge Valve – V01& V02 Series	225
		Block & Bleed 2 Valve Manifold – V01 & V02 Series	226
		3 Valve Manifold – V01, V02 & V03 Series	227
		5 Valve Manifold – V01, V02 & V03 Series	228
		Low pressure Ball Valve – V02 Series	229
		High Pressure Ball Valve – V02 Series	230
		Multiport Valves – V02 Series	231
		Pressure Limiting Valve – PL02 Series	232
		1115A & 1115P Capillary Lines	233
		1092, 1094, 1095 Gauge Cocks, 2265 Electric Contacts	234
		7001L, 7004L Steel Needle Valve	235

Distribuidor Autorizado CALFER
CALFER DE MÉXICO®
CONTROLES AUTOMÁTICOS INDUSTRIALES
50 ANIVERSARIO
www.calfer.com.mx 01 800 0125 742 /CalferMx
soporte.tecnico2@calfer.com.mx

ASHCROFT®
Trust the shield.®

Ashcroft Inc. Trademarks

Ashcroft maintains a variety of globally Registered Trademarks and Service Marks, many of which appear in this Ordering Handbook. The following Trademarks and Service Marks are the property of Ashcroft Inc. and should not be used without its permission on any product or service:

Ashcroft®
Duradrive™ pressure gauge
Duragauge® pressure gauge
Duragauge® ***PLUS!***™ pressure gauge
Duralife® pressure gauge
Duralife® ***PLUS!***™ pressure gauge
DuraShield™ instrument assembly
Duratemp® thermometer
Duratube™ system
Easy Zero™ adjustment
Everyangle™ connection
FlutterGuard™ option
GloBand™ display
Heise®
Maxivision® dial
MicroSpan® adjustment
MiniGauge® pressure gauge
PLUS!™ Performance option
Power*Flex*™ movement
Quick-Select™ calibrator
Si-Glas™ sensor
SpoolCal® actuator
True Zero™ indication
Weksler®
Willy®

Ashcroft Inc. Service Marks

ActionLine®
Ashcroft ActionLine®
Ashcroft Gold Service®
CASE® - Critical Application Solution Experts®
CES℠
Gold Service℠
Heise ActionLine®
Heise Gold Service℠

Other Trademarks

These non-Ashcroft trademarks are used throughout the book and are the property of their respective owners:

AMINCO®	Kynar®
Bendix®	Monel®
Carpenter® 20	Neobee® M-20
Cherry Burrell®	Neoprene®
Dacron®	Nicrobraze®
Decrin®	Noryl®
Duratherm 600®	Skydrol® 500-4
Grafoil®	Syltherm®
Halar®	Teflon®
Halocarbon®	Tri-Clamp®
Hastelloy	Ultrafil®
Hirschmann®	VCO®
Inconel®	VCR®
Kalrez®	Viton®

NACE

NACE is the acronym for the National Association of Corrosion Engineers. Their standard MRO175 MROITS/150 IS166 titled “Sulfide Stress Cracking Resistant Metallic Materials for Oilfield Equipment” is cited when ordering instruments for oilfield applications involving sour oil or gas with traces of hydrogen sulfide. It is a legal requirement in many states. NACE instruments are also suitable for use in sewage treatment plants and other applications with traces of hydrogen sulfide in the process.

For high concentrations of hydrogen sulfide in a diaphragm seal should be used; a Tantalum diaphragm and Hastelloy C (C276) lower housing are recommended. For over 3% or 30,000 ppm, a seal is essential.

Units of Measurement

psi = pounds per sq. inch
psig = pounds per sq. inch gauge
psia = pounds per sq. inch absolute
psid = pounds per sq. inch differential
inH_2O = inches of water
IWC = inches of water column
IWD = Inches of water differential
mmH_2O = millimeter of water
inHg = inches of mercury
IMV = inches of mercury vacuum
mPa = millipascal
MPa = megapascal
pa = pascal
kPa = kilopsacal
mBar = millibar
kg/cm^2 = kilograms per centimeter squared
mBar = millibar

Logos

PLUS!™ = ***PLUS!***™ Performance Option – Dampens Vibration, Shock and Pulsation effects

Gold Service℠ = Expedited Delivery

RoHS = RoHS Compliant

CRN = Canadian Registration Number

PRESSURE GAUGES

PROCESS GAUGES

1279, 1377, 1379, 2462..... 6-7
1259, 1290 8-9
1109 10-11
T5500, T6500, T5500E 12-13
1187, 1188, 1189 14-15
Standard Pressure Ranges..... 16-18

ASHCROFT®
Trust the shield.®

FEATURES

- Solid front safety case with pressure relief back
- Dial sizes 4½″, 6″ and 8½″
- ±0.5% of span (ASME B40.100 Grade 2A)
- Ranges, vacuum, compound and 0-100,000 psi
- Customizable dial printing options

SPECIFICATIONS

Accuracy:	±0.5% of span (ASME B40.100 Grade 2A)
Process Connection:	¼ NPT, ½ NPT, 9/16-18 UNF-2B Aminco (high pressure connection)
Case Style:	Solid front with pressure relief back
Movement:	Rotary, adjustable, 400 SS, Teflon® coated
Window Material	Glass (XPD Acrylic, XSG Safety glass and XNG non-glare glass optional)
Pointer:	Micrometer, adjustable, aluminum
Weather Protection:	Dry case: Case not sealed, recommended for weather protected environment only Liquid filled or field fillable: IP66 or NEMA 4X (S&P tube and socket), NEMA 4 (A&R tube and socket Hermetically sealed: IP66
Mounting:	Standard: Stem, surface or remote Optional: Flush (X56), Pipe (XTM)
Dampening:	Liquid fill: Glycerin (STD.), Silicone (XGV), Halocarbon® (XGX), ***PLUS!***™ performance (XLL)

WETTED COMPONENTS

Model	Bourdon Tube	Process Connection Materials	Joints
1279	316L SS	316L SS	Welded
1377	316L SS	Steel	Welded
1379	K-Monel® 500 Tube	Monel® 400	Welded
2462	C510 Phos. Bronze	Brass	Silver brazed
1379	Inconel® 718	316L SS (60-1379 only)	Welded

NON-WETTED COMPONENTS

Model	Case	Ring	Back Cover
1279	Phenolic	Polycarbonate	Polycarbonate
1377	Aluminum, black epoxy	Hinged steel, black enamel	300 SS
1379	Aluminum	Polycarbonate	Polycarbonate
2462	Black, polypropylene	Bayonet lock, polypropylene	Polypropylene

MIN/MAX TEMPERATURE LIMITS

Version	Ambient	Process	Storage
Dry	-20°F to 200°F (-29°C to 93°C)	-20°F to 250°F (-29°C to 121°C)	-40°F to 250°F (-40°C to 121°C)
PLUS!™	-40°F to 150°F (-40°C to 66°C)	-40°F to 200°F (-40°C to 93°C)	-40°F to 150°F (-40°C to 66°C)
Glycerin Fill	20°F to 150°F (-7°C to 66°C)	20°F to 150°F (-7°C to 66°C)	0°F to 150°F (-18°C to 66°C)
Silicone Fill	-40°F to 150°F (-40°C to 66°C)	-40°F to 200°F (-40°C to 93°C)	-40°F to 150°F (-40°C to 66°C)
Halocarbon Fill	-40°F to 150°F (-40°C to 66°C)	-40°F to 200°F (-40°C to 93°C)	-40°F to 150°F (-40°C to 66°C)

1279
4½″ dial size

1377
4½″, 6″, 8½″ dial sizes

1379
4½″, 6″, 8½″ dial sizes

2462
6″ dial size

Distribuid
CALFER DE MÉXICO®
CONTROLES AUTOMÁTICOS INDUSTRIALES
50 ANIVERSARIO
www.calfer.com.mx 01 800 0125 742 /CalferMx
soporte.tecnico2@calfer.com.mx

ORDERING CODE Example:	451279	S	SH	04	L	XLL	15#
Dial Size/Model Code							
451279 - 4½″ phenolic case, solid front	451279						
451377 - 4½″ aluminum case, solid front							
451379 - 4½″ aluminum case, solid front							
601377 - 6″ aluminum case, solid front							
601379 - 6″ aluminum case, solid front							
602462 - 6″ polypropylene case, solid front							
851377 - 8½″ aluminum case, solid front							
851379 - 8½″ aluminum case, solid front							
System (tube and process connection)							
A - Bronze tube, brass process connection, max. pressure connection 1,000 psi							
P - K-Monel® 500 tube, Monel® 400 process connection, max. pressure 30,000 psi							
R - 316L SS tube, steel process connection, max. pressure 30,000 psi							
S - 316 SS tube, 316L SS process connection, max. pressure 30,000 psi		S					
WW - Inconel® 718 tube, Inconel® 718 process connection Only available on 601379 (50,000 to 100,00 psi ranges)							
Case Design							
S - Solid front case, dry							
SH - Solid front case, dry, sealed, hermetically sealed, (451279/451379/601379 only)			SH				
SL - Solid front case, liquid filled (glycerin std.) (451279/451379/601379 only)							
Process Connection Sizes							
02 - ¼ NPT Male, N/A for ranges over 20,000 psi				04			
04 - ½ NPT Male, N/A for ranges over 20,000 psi							
09 - 9⁄16″ 18 UNF-2B, Aminco® high pressure fitting, standard for pressures over 20,000 psi							
Process Connection Location							
L - Lower					L		
B - Back							
D - Side (3 o'clock)							
E - Side connection (9 o'clock)							
T - Top connection							
Options (if choosing an option(s) must include an "X")						X__	
LL - ***PLUS!***™ Performance						LL	
GV - Silicone case fill (451279/451379/601379 only)							
GX - Halocarbon® case fill (451279/451379/601379 only)							
TS - Throttle screw (standard with liquid filled, hermetically sealed or ***PLUS!***™ Performance)							
6B - Cleaned for oxygen service							
PD - Acrylic window (standard with liquid filled or hermetically sealed cases)							
SG - Safety glass							
NG - Non-glare glass (4½″ and 6″ cases only, N/A with liquid fill or hermetically sealed cases)							
EP - Maximum pointer, (adjustable, N/A with liquid filled or hermetically sealed cases)							
SH - Red set hand, stationary							
NH - SS tag wired to case							
56 - Flush mounting ring (451279/451379/601379 only)							
BF - Surface mounting bracket (851377/851379/602462 only)							
BQ - Flush mounting bracket (602462 only)							
DA - Dial marking (text marking on the dial)							
AB - Gauges calibrated to compensate for absolute pressure							
OS - Overload stop							
VS - Underload stop							
HY - Hydrostatic/pneumatic testing (system pressurized to 150% of rated system pressure for 5 minutes. Overload stop standard.)							
C4 - Individual calibration chart (in accordance with ASME B40.100:2013. Accuracy traceable to NIST)							
Range (coding examples only, see range table on page 16 for all standard ranges)							
Single Scales							
15# - 15 psi							15#
1BR - 1 bar							
1KSC - 1 kg/cm^2							
100KP - 100 kilopascal							
Dual Scales							
15#/BR - 15 psi inner scale, 1 bar outer scale							
1BR/# - 1 bar inner scale, 15 psi outer scale							

ASHCROFT®
Trust the shield.®

FEATURES:
1259, 1290

- Accuracy complies with ASME B40.100 Grade 2A (±0.5% of span)
- Solid front safety case with pressure relief back
- 4½″ dial size

1290 Direct Drive Gauge

- Gearless movement
- Ideal for shock and vibration applications
- Low volumetric displacement makes it compatible with mini-diaphragm seal

GOLD Service

1259
4½″ dial size

1290
4½″ dial size

SPECIFICATIONS

Accuracy:	±0.5% of span (ASME B40.100 Grade 2A)
Process Connection:	¼ NPT, ½ NPT
Case Style:	Solid front with pressure relief back
Movement:	Adjustable
Window Material	1259: Glass (STD.), safety glass or acrylic (OPT.) 1290: Acrylic (STD.), regular glass (OPT.)
Pointer:	Aluminum
Weather Protection:	Dry case: Case is not sealed, recommended for weather protected environment only Liquid fill and weatherproof: IP65 (1259 only)
Mounting:	Stem or surface
Dampening:	1259: Liquid fill, throttle screw and 1106: pulsation dampener

WETTED COMPONENTS

Model	Bourdon Tube	Process Connection Materials	Joints
1259	316L SS tube and process connection K-Monel® 500 tube and Monel® 400 process connection	316L SS	Welded
1290	Inconel® X-750, 304 SS capillary	316L SS	Welded

NON-WETTED COMPONENTS

Model	Case	Ring	Back Cover
1259	PBT	PBT	PBT
1290	ABS Thermoplastic	302 SS	Polypropylene

MIN/MAX TEMPERATURE LIMITS (1259 only)

Version	Ambient	Process	Storage
Dry	-20°F to 200°F (-29°C to 93°C)	-20°F to 250°F (-29°C to 121°C)	-40°F to 250°F (-40°C to 121°C)
Glycerin Fill	20°F to 150°F (7°C to 66°C)	20°F to 200°F (7°C to 93°C)	0°F to 150°F (-18°C to 66°C)
Silicone Fill	-40°F to 150°F (-40°C to 66°C)	-40°F to 200°F (-40°C to 93°C)	-40°F to 150°F (-40°C to 66°C)

Distribuidor Autorizado CALFER
CALFER DE MÉXICO®
CONTROLES AUTOMÁTICOS INDUSTRIALES
50 ANIVERSARIO
www.calfer.com.mx 01 800 0125 742 /CalferMx
soporte.tecnico2@calfer.com.mx

ORDERING CODE Example:	451259	S	D	02	L	XC4	15#
Dial Size/Model Code							
451259 - 4½″ PBT case, solid front	451259						
451290 - 4½″ ABS thermoplastic case, solid front. Direct drive							
System (tube and process connection)							
S - 316L SS tube and process connection, (451259 only)		S					
P - K-Monel® 500 tube, Monel® 400 process connection, (451259 only)							
WD - Inconel® direct drive coil X750, SS process connection, (451290 only)							
Case Design - Leave blank for 451290							
D - Dry			D				
L -Glycerin liquid filled (IP65), (451259 only)							
Process Connection Sizes							
02 - ¼ NPT Male				02			
04 - ½ NPT Male							
Process Connection Location							
L - Lower					L		
Options (if choosing an option(s) must include an "X")						X__	
GV - Silicone filled case (451259 only)							
C4 - Individual calibration chart in accordance with ASME B40.100:2013. Accuracy traceable to NIST						C4	
6B - Cleaned for oxygen service							
NH - SS tag wired to case							
SG - Safety glass (451259 only)							
RG - Regular glass (451290 only)							
LJ - Hermetically sealed (451259 only)							
GX - Halocarbon® case fill (451259 only)							
Range (coding examples only, see range table on page 16 for all standard ranges)							
Single Scales							
15# - 15 psi (1259 only)							15 #
1BR - 1 bar (1259 only)							
1KSC - 1 kg/cm² (1259 only)							
100KP - 100 kilopascal (1259 only)							
Dual Scales							
2KSC/# - 2 bar inner scale, 30 psi outer scale							

Distribuidor Autorizado CALFER
CALFER DE MÉXICO®
CONTROLES AUTOMÁTICOS INDUSTRIALES
50 ANIVERSARIO
www.calfer.com.mx 01 800 0125 742 /CalferMx
soporte.tecnico2@calfer.com.mx

ASHCROFT®
Trust the shield.®

FEATURES

- Solid front design with full blowout back
- Epoxy coated system offers superior corrosion resistance
- ***PLUS!***™ Performance (optional) dampens vibration shock and pulsation effects; provides liquid filled performance in a dry gauge

1109
4½″ dial size

SPECIFICATIONS

Accuracy:	±0.5% of span (ASME B40.100 Grade 2A)
Process Connection:	¼ NPT, ½ NPT ¼ High pressure tubing
Case Style:	Solid front with pressure relief back
Movement:	Adjustable
Window Material	Glass (STD.), safety glass or acrylic (OPT.)
Pointer:	Aluminum
Weather Protection:	IP54 (STD.), IP65 hermetically sealed (OPT.)
Mounting:	Stem
Dampening:	***PLUS!***™ Performance, throttle screw, dampeners, capillary, diaphragm seals and snubbers

WETTED COMPONENTS

Model	Bourdon Tube	Process Connection Materials	Joints
1109	316L SS, Inconel® for ranges greater than 40,000 psi	316 SS	Welded

NON-WETTED COMPONENTS

Model	Case	Ring	Back Cover
1109	300 SS	300 SS	300 SS

MIN/MAX TEMPERATURE LIMITS

Version	Ambient	Process	Storage
Dry	-20°F to 200°F (-29°C to 93°C)	-20°F to 250°F (-29°C to 121°C)	-40°F to 250°F (-40°C to 121°C)

Distribuidor Autorizado CALFER
CALFER DE MÉXICO®
CONTROLES AUTOMÁTICOS INDUSTRIALES
50 ANIVERSARIO
www.calfer.com.mx 01 800 0125 742 /CalferMx
soporte.tecnico2@calfer.com.mx

ORDERING CODE Example:	451109	SD	04	L	XLL	15#
Dial Size/Model Code						
451109 - 4½″ 300 SS, solid front	451109					
System (tube and process connection)						
SD - 316 SS tube, (Vac-30,000 psi)		SD				
WD - Inconel® 700 tube, 316 SS process connection (40,000-100,000 psi)						
Process Connection Sizes						
02 - ¼ NPT Male, (up to 20,000 psi)						
04 - ½ NPT Male, (up to 30,000 psi)			04			
09 - ¼″ high pressure tubing connection, (40,000-100,000 psi)						
Process Connection Location						
L - Lower connection only				L		
Options (if choosing an option(s) must include an "X")					X__	
LL - ***PLUS!***™ Performance					LL	
TS - Throttle screw						
YW - 316 SS case						
6B - Cleaned for oxygen service						
PD - Acrylic window						
SG - Safety glass						
FW - Back flange (welded to case)						
C4 - Individual calibration chart (in accordance with ASME B40.100:2013. Accuracy traceable to NIST)						
Range (coding examples only, see range table on page 17 for all standard ranges)						
Single Scales						
15# - 15 psi						15#
1KSC - 1 kg/cm²						
100KP - 100 kilopascal						

T5500, T6500, T5500E Pressure Gauge

ASHCROFT®
Trust the shield.®

FEATURES

- Rugged SS construction
- Easily adjusted micrometer pointer
- Optional ATEX approval (T5500 & T6500)
- Integrated pressure transmitter (T5500E)

SPECIFICATIONS

Accuracy:	T5500/T6500: ±1% of span, ±0.5% optional T5500E: ±0.5% of span
Process Connection:	T5500/T6500: ¼ NPT Male, ½ NPT Male, G ¼ NPT, B male, G ½ NPT B male T5500E: ¼ NPT Male, ½ NPT Male
Case Style:	T5500/T5500E: Open front with rear blowout disk T6500: Solid front with full rear blowout back
Movement:	Adjustable
Window Material	T5500: Glass (STD.), acrylic or safety glass (OPT.) T5500E/T6500E: Safety glass (STD.) acrylic (OPT.)
Pointer:	Aluminum
Weather Protection:	T5500/T6500: IP66 NEMA 4X, Weatherproof T5500E/: IP65
Mounting:	T5500/T6500 stem, flush or surface optional
Dampening:	***PLUS!***™ Performance, throttle screw, dampeners, and snubbers

WETTED COMPONENTS

Model	Bourdon Tube	Process Conn. Mat'ls	Joints
T5500	316L SS or Monel® 400	316 SS	Welded
T6500	316L SS or Monel® 400	316 SS	Welded
T5500E	316L SS Sensor (17-4 PH SS)	316 SS	Welded

NON-WETTED COMPONENTS

Model	Case	Ring	Back Cover
All	304 SS (STD.)	304 SS	304 SS

T5500E ELECTRICAL SPECIFICATIONS

Power Supply Requirements:	Supply voltage:12-30 Vdc
Supply Current:	Maximum 20 mA
Output Signal:	4-20 mA
Isolation Voltage:	350 Vac
Max. Loop Resistance	</= (UB – 9.5 V)/0.02 A
Case & Electrical Termination Isolation	> 1 M ohm @ 50 Vdc

MIN/MAX TEMPERATURE LIMITS

Version	Ambient	Process	Storage
Dry	-40°F to 158°F (-40°C to 70°C)	-40°F to 392°F (-40°C to 200°C)	-40°F to 158°F (-40°C to 70°C)
PLUS!™	-19°F to 158°F (-7°C to 70°C)	-40°F to 392°F (-40°C to 200°C)	-40°F to 158°F (-40°C to 70°C)
Glycerin Fill	19°F to 158°F (-7°C to 70°C)	19°F to 199°F (-7°C to 93°C)	-40°F to 158°F (-40°C to 70°C)
Silicone Fill	19°F to 158°F (-7°C to 70°C)	-40°F to 199°F (-40°C to 93°C)	-40°F to 158°F (-40°C to 70°C)
Halocarbon® Fill	19°F to 158°F (-40°C to 70°C)	-40°F to 199°F (-40°C to 93°C)	-40°F to 158°F (-40°C to 70°C)
ATEX	19°F to 158°F (-7°C to 70°C)	-40°F to 392°F (-40°C to 200°C)	-40°F to 158°F (-40°C to 70°C)
T5500E	-4°F to 158° F (-20°C to 70°C)	-13°F to 185°F (-25°C to 85°C)	-40°F to 185°F (-40°C to 85°C)

T5500
100mm or 160mm dial size

T6500
100mm or 160mm dial size

T5500E
100mm dial size

Distribuid
CALFER DE MÉXICO®
CONTROLES AUTOMÁTICOS INDUSTRIALES
50 ANIVERSARIO
www.calfer.com.mx 01 800 0125 742 /CalferMx
soporte.tecnico2@calfer.com.mx

ASHCROFT®
Trust the shield.®

ORDERING CODE Example:	10T5500	S	D	02	L	F3	15#	XC4
Dial Size/Model Code								
10T5500 - 100mm 304 SS case, open front	10T5500							
16T5500 - 160mm 304 SS case, open front								
10T6500 - 100mm 304 SS case, solid front								
16T6500 - 160mm 304 SS case, solid front								
10T5500E - 100mm 304SS case, open front with intergrated transmitter								
System (tube and process connection)								
S - 316L SS		S						
P - Monel® 400 (T5500/T6500 only)								
Case Design (Leave blank for T5500E)								
D - Dry			D					
L - Liquid fill (T5500/T6500 only)								
Process Connection Sizes								
02 - ¼ Male				02				
04 - ½ Male O/C								
13 - G ¼ Male (T5500/T6500 only)								
14 - G ½ Male (T5500/T6500 only)								
Process Connection Location								
L - Lower					L			
B - Back (T5500 only)								
Electrical Terminations (Applies to T5500E only. Leave blank for T5500/T6500)								
F3 - Type B Universal box cable connector (left side mount)						F3		
M1 - DIN EN 175301-803 angle connector (back mount)								
M2 - DIN EN 175301-803 angle connector (left side mount)								
Range (coding examples only, see range table on page 17 for all standard ranges)								
Single Scales								
15# - 15 psi							15#	
1KSC - 1 kg/cm²								
1BR - 1 bar								
160KP -160 kilopascal								
Options (if choosing an option(s) must include an "X")								X__
C4 - Individual calibration chart (In accordance with ASME B40.100:2013. Accuracy traceable to NIST)								C4
LL - ***PLUS!***™ Performance, silicone free								
NZ - ***PLUS!***™ Performance								
SH - Red set hand, stationary, (dry case only)								
FF - Front flange with M1 connection only, (T5500E only)								
OS - Overload stop								
VS - Underload stop								
SG - Safety glass								
PD - Acrylic window								
YW -316L SS case								
NH - SS tag wired to case								
TU -Throttle plug								
6B - Cleaned for oxygen service								
AJ - Calibration 0.5% full scale, (T5500/T6500 only)								
GV - Silicone fill case, (T5500/T6500 only)								
GX - Halocarbon® fill case, (T5500/T6500 only)								
AT - ATEX, (T5500/T6500 only)								

Distribuidor Autorizado CALFER
CALFER DE MÉXICO®
CONTROLES AUTOMÁTICOS INDUSTRIALES
50 ANIVERSARIO
www.calfer.com.mx 01 800 0125 742 /CalferMx
soporte.tecnico2@calfer.com.mx

ASHCROFT®
Trust the shield.®

FEATURES

- Inches of water ranges
- Solid front safety case with pressure relief back
- Bronze, 316 SS or Monel® wetted parts
- Available with diaphragm seals

GOLD Service

SPECIFICATIONS

Accuracy:	2%-1%-2% of span (ASME B40.100 Grade A)
Process Connection:	¼ NPT, ½ NPT
Case Style:	1187 & 1189 - Aluminum, black epoxy coated 1188 - Phenolic
Movement:	Adjustable
Window Material:	Glass (STD.), safety glass or acrylic (OPT.)
Pointer:	Aluminum
Weather Protection:	Case is not sealed, recommended for weather protected environment only
Mounting Options:	Flush, stem or surface
Dampening Options:	Throttle screw, dampeners, capillary, diaphragm seals and snubbers

WETTED COMPONENTS

Model	Bellows	Process Connection Materials	Joints
1187	Brass, 316 SS, Monel®	Brass, 316 SS, Monel®	Threaded & Soldered
1188	Brass, 316 SS, Monel®	Brass, 316 SS, Monel®	Threaded & Soldered
1189	Brass, 316 SS, Monel®	Brass, 316 SS, Monel®	Threaded & Soldered

NON-WETTED COMPONENTS

Model	Case	Ring	Back Cover
1187	Aluminum, black epoxy coated	Steel, black epoxy coated	Polypropylene
1188	Phenolic	Polycarbonate	Polypropylene
1189	Aluminum, black epoxy coated	Polycarbonate	Polypropylene

MIN/MAX TEMPERATURE LIMITS

Version	Ambient	Process	Storage
Dry	-20°F to 150°F (-29°C to 66°C)	-20°F to 150°F (-29°C to 66°C)	-40°F to 150°F (-40°C to 66°C)

1187
4½″ dial size

1188
4½″ dial size

1189
4½″, 6″ dial size

Distribuidor Autorizado CALFER
CALFER DE MÉXICO®
CONTROLES AUTOMÁTICOS INDUSTRIALES
50 ANIVERSARIO
www.calfer.com.mx 01 800 0125 742 /CalferMx
soporte.tecnico2@calfer.com.mx

ORDERING CODE Example:	451187	S	D	02	B	XC4	10IW
Dial Size/Model Code							
451187 - 4½″ aluminum case, solid front	451187						
451188 - 4½″ phenolic case, solid front							
451189 - 4½″ aluminum case, solid front							
601189 - 6″ aluminum case, solid front							
System (tube and process connection)							
A - Brass bellows, brass process connection							
S - 316 SS bellows, stainless steel process connection		S					
P - K-Monel® 500 bellows, Monel® 400 process connection							
Case Design							
D - Dry, (IP54)			S				
Process Connection Sizes							
02 - ¼ NPT Male				02			
04 - ½ NPT Male							
Process Connection Location							
L - Lower, (1188 and 1189 only.)							
B - Back mount connection, (1188 and 1187 only.)					B		
Options (if choosing an option(s) must include an "X")						X__	
C4 - Individual calibration chart (in accordance with ASME B40.100:2013. Accuracy traceable to NIST)						C4	
6B - Cleaned for oxygen service							
F8 - Gauge, flexible line assembly and diaphragm seal							
PD - Acrylic window							
SG - Safety glass							
NG - Non-glare glass							
DA - Marking on dial							
NH - SS tag wired to case							
NN - Paper tag bonded to case							
56 - Flush mounting ring, (1188 and 1189 only)							
Range (coding examples only, see range table on page 18 for all standard ranges)							
Single Scales							
10IW - 10″ inH_2O							10IW

Distribuidor Autorizado CALFER
CALFER DE MÉXICO®
CONTROLES AUTOMÁTICOS INDUSTRIALES
50 ANIVERSARIO
www.calfer.com.mx 01 800 0125 742 /CalferMx
soporte.tecnico2@calfer.com.mx

Standard Pressure Ranges

1279, 1377, 1379, 2462

	psi	bar	kPa	MPa	kg/cm²
Vacuum	30IMV	N1BR	N100KP	N1MP	N1KG
	–	N1/.6BR	N100/60KP	.1/.06MP	N1/.6KG
Compound	V/15#	–	–	–	–
	–	N1/1.5BR	N100/150KP	N.1/.15MP	N1/1.5KG
	V/30#	–	–	–	–
	–	N1/3BR	N100/300KP	N.1/.3MP	N1/3KG
	V/60#	–	–	–	–
	–	N1/5BR	N100/500KP	N.1/.5MP	N1/5KG
	V/100#	–	–	–	–
	–	N1/9BR	N100/900KP	N.1/.9MP	N1/9KG
Positive Pressure	15#	1BR	100KP	.1MP	1KG
	20#	–	–	–	–
	–	1.6BR	160KP	.16MP	1.6KG
	30#	–	–	–	–
	–	2.5BR	250KP	.25MP	2.5KG
	60#	4BR	400KP	.4MP	4KG
	–	6BR	600KP	.6MP	6KG
	100#	–	–	–	–
	120#	–	–	–	–
	–	10BR	1000KP	1MP	10KG
	160#	–	–	–	–
	200#	–	–	–	–
	–	16BR	1600KP	1.6MP	16KG
	300#	–	–	–	–
	–	25BR	2500KP	2.5MP	25KG
	400#	–	–	–	–
	500#	–	–	–	–
	600#	40BR	4000KP	4MP	40KG
	800#	–	–	–	–
	–	60BR	6000KP	6MP	60KG
	1000#	–	–	–	–
	1500#	100BR	10000KP	10MP	100KG
	2000#	–	–	–	–
	–	160BR	16000KP	16MP	160KG
	3000#	–	–	–	–
	–	250BR	25000KP	25MP	250KG
	4000#	–	–	–	–
	5000#	–	–	–	–
	6000#	400BR	40000KP	40MP	400KG
	8000#	–	–	–	–
	–	600BR	60000KP	60MP	600KG
	10000#	–	–	–	–
	15000#	1000BR	100000KP	100MP	1000KG
	20000#	-	-	-	-
	-	1600BR	-	160MP	1600KG
	30000#	-	-	-	-
		2500BR	-	250MP	2500KG
1379WW Only	50000#	-	-	-	
	-	4000BR	-	400MP	4000KG
	80000#	-	-	-	
	-	6000BR	-	600MP	6000KG
	100000#	-	-	-	-

1259

	psi	bar	kPa	MPa	kg/cm²
Vacuum	30IMV	N1BR	N100KP	N1MP	N1KG
	–	N1/.6BR	N100/60KP	.1/.06MP	N1/.6KG
Compound	V/15#	–	–	–	–
	–	N1/1.5BR	N100/150KP	N.1/.15MP	N1/1.5KG
	V/30#	–	–	–	–
	–	N1/3BR	N100/300KP	N.1/.3MP	N1/3KG
	V/60#	–	–	–	–
	–	N1/5BR	N100/500KP	N.1/.5MP	N1/5KG
	V/100#	–	–	–	–
	–	N1/9BR	N100/900KP	N.1/.9MP	N1/9KG
Positive Pressure	15#	1BR	100KP	.1MP	1KG
	20#	–	–	–	–
	–	1.6BR	160KP	.16MP	1.6KG
	30#	–	–	–	–
	–	2.5BR	250KP	.25MP	2.5KG
	60#	4BR	400KP	.4MP	4KG
	–	6BR	600KP	.6MP	6KG
	100#	–	–	–	–
	120#	–	–	–	–
	–	10BR	1000KP	1MP	10KG
	160#	–	–	–	–
	200#	–	–	–	–
	–	16BR	1600KP	1.6MP	16KG
	300#	–	–	–	–
	–	25BR	2500KP	2.5MP	25KG
	400#	–	–	–	–
	500#	–	–	–	–
	600#	40BR	4000KP	4MP	40KG
	800#	–	–	–	–
	–	60BR	6000KP	6MP	60KG
	1000#	–	–	–	–
	1500#	100BR	10000KP	10MP	100KG
	2000#	–	–	–	–
	–	160BR	16000KP	16MP	160KG
	3000#	–	–	–	–
	–	250BR	25000KP	25MP	250KG
	4000#	–	–	–	–
	5000#	–	–	–	–
	6000#	400BR	40000KP	40MP	400KG
	8000#	–	–	–	–
	–	600BR	60000KP	60MP	600KG
	10000#	–	–	–	–
	15000#	1000BR	100000KP	100MP	1,000KG
	20000#	-	-	-	-

Distribuidor Autorizado CALFER
CALFER DE MÉXICO®
CONTROLES AUTOMÁTICOS INDUSTRIALES
50 ANIVERSARIO
www.calfer.com.mx 01 800 0125 742 /CalferMx
soporte.tecnico2@calfer.com.mx

Standard Pressure Ranges

1109

	psi	bar	kPa	MPa	kg/cm²
Vacuum	30IMV	N1BR	N100KP	N1MP	N1KG
	–	N1/.6BR	N100/60KP	.1/.06MP	N1/.6KG
Compound	V/15#	–	–	–	–
	–	N1/1.5BR	N100/150KP	N.1/.15MP	N1/1.5KG
	V/30#	–	–	–	–
	–	N1/3BR	N100/300KP	N.1/.3MP	N1/3KG
	V/60#	–	–	–	–
	–	N1/5BR	N100/500KP	N.1/.5MP	N1/5KG
	V/100#	–	–	–	–
	–	N1/9BR	N100/900KP	N.1/.9MP	N1/9KG
Positive Pressure	15#	1BR	100KP	.1MP	1KG
	20#	–	–	–	–
	–	1.6BR	160KP	.16MP	1.6KG
	30#	–	–	–	–
	–	2.5BR	250KP	.25MP	2.5KG
	60#	4BR	400KP	.4MP	4KG
	–	6BR	600KP	.6MP	6KG
	100#	–	–	–	–
	120#	–	–	–	–
	–	10BR	1000KP	1MP	10KG
	160#	–	–	–	–
	200#	–	–	–	–
	–	16BR	1600KP	1.6MP	16KG
	300#	–	–	–	–
	–	25BR	2500KP	2.5MP	25KG
	400#	–	–	–	–
	500#	–	–	–	–
	600#	40BR	4000KP	4MP	40KG
	800#	–	–	–	–
	–	60BR	6000KP	6MP	60KG
	1000#	–	–	–	–
	1500#	100BR	10000KP	10MP	100KG
	2000#	–	–	–	–
	–	160BR	16000KP	16MP	160KG
	3000#	–	–	–	–
	–	250BR	25000KP	25MP	250KG
	4000#	–	–	–	–
	5000#	–	–	–	–
	6000#	400BR	40000KP	40MP	400KG
	8000#	–	–	–	–
	–	600BR	60000KP	60MP	600KG
	10000#	–	–	–	–
	15000#	1000BR	100000KP	100MP	1000KG
	20000#	-	-	-	-
	-	1600BR	-	160MP	1600KG
	30000#	-	-	-	-
		2500BR	-	250MP	2500KG
1109WD Only	50000#	-	-	-	
	-	4000BR	-	400MP	4000KG
	80000#	-	-	-	
	-	6000BR	-	600MP	6000KG
	100000#	-	-	-	-

T5500, T6500, T5500E

	psi	bar	kPa	MPa	kg/cm²
Vacuum	30IMV	N1BR	N100KP	N1MP	N1KG
	–	N1/.6BR	N100/60KP	.1/.06MP	N1/.6KG
Compound	V/15#	–	–	–	–
	–	N1/1.5BR	N100/150KP	N.1/.15MP	N1/1.5KG
	V/30#	–	–	–	–
	–	N1/3BR	N100/300KP	N.1/.3MP	N1/3KG
	V/60#	–	–	–	–
	–	N1/5BR	N100/500KP	N.1/.5MP	N1/5KG
	V/100#	–	–	–	–
	–	N1/9BR	N100/900KP	N.1/.9MP	N1/9KG
Positive Pressure	15#	1BR	100KP	.1MP	1KG
	20#	–	–	–	–
	–	1.6BR	160KP	.16MP	1.6KG
	30#	–	–	–	–
	–	2.5BR	250KP	.25MP	2.5KG
	60#	4BR	400KP	.4MP	4KG
	–	6BR	600KP	.6MP	6KG
	100#	–	–	–	–
	120#	–	–	–	–
	–	10BR	1000KP	1MP	10KG
	160#	–	–	–	–
	200#	–	–	–	–
	–	16BR	1600KP	1.6MP	16KG
	300#	–	–	–	–
	–	25BR	2500KP	2.5MP	25KG
	400#	–	–	–	–
	500#	–	–	–	–
	600#	40BR	4000KP	4MP	40KG
	800#	–	–	–	–
	–	60BR	6000KP	6MP	60KG
	1000#	–	–	–	–
	1500#	100BR	10000KP	10MP	100KG
	2000#	–	–	–	–
	–	160BR	16000KP	16MP	160KG
	3000#	–	–	–	–
	–	250BR	25000KP	25MP	250KG
	4000#	–	–	–	–
	5000#	–	–	–	–
	6000#	400BR	40000KP	40MP	400KG
	8000#	–	–	–	–
	–	600BR	60000KP	60MP	600KG
	10000#	–	–	–	–
	15000#	1000BR	100000KP	100MP	1000KG

Distribuidor Autorizado CALFER
CALFER DE MÉXICO®
CONTROLES AUTOMÁTICOS INDUSTRIALES
50 ANIVERSARIO
www.calfer.com.mx 01 800 0125 742 /CalferMx
soporte.tecnico2@calfer.com.mx

Standard Pressure Ranges

	1187, 1188, 1189						
	in. H_2O	mmHg	inHg	mmH2O	psi	mbar	kPa
Vacuum	N10IW	N18MM	-	-	-	-	-
	N15IW	N28MM	-	-	-	-	-
	N20IW	N37MM	-	-	-	-	-
	N30IW	N56MM	-	-	-	-	-
	N40IW	N75MM	-	-	-	-	-
	N60IW	N110MM	-	-	-	-	-
	N80IW	N150MM	-	-	-	-	-
	N100IW	N180MM	-	-	-	-	-
	N150IW	N270MM	-	-	-	-	-
	-	-	N10IM	-	-	-	-
	-	-	N15IM	-	-	-	-
	-	-	N20IM	-	-	-	-
Compound	-	-	-	N125/125MW	-	12.5MBL*	1.25KPL*
	N5/5IW	-	-	-	-	-	-
	-	-	-	N200/200MW	-	N20/20MB	N2/2KP
	N10/10IW	-	-	-	-	-	-
	-	-	-	N300/300MW	-	N30/30MB	N3/3KP
	-	-	-	N500/500MW	-	N50/50MB	N5/5KP
	N30/10IW	-	-	-	-	-	-
	N20/20IW	-	-	-	-	-	-
	N10/30IW	-	-	-	-	-	-
	N30/30IW	-	-	-	-	-	-
	N40/20IW	-	-	N800/800MW	-	N80/80MB	N8/8KP
	-	-	-	1250MWL*	-	N125/125MB	12.5KPL*
	N70/30IW	-	-	-	-	-	-
	-	-	-	2000MWL*	-	N200/200MB	N20/20KP
	-	-	-	3000MWL*	-	N300/300MB	N30/30KP
Positive Pressure	5IW	-	-	-	-	-	-
	10IW		-	250MW		25MB	2.5KG
	15IW	-	-	-	-	-	-
	-	-	-	400MW	-	-	-
	-	-	-	-	-	40MB	4KG
	20IW	-	-	-	-	-	-
			-	600MW	-	-	-
	-	-	-	-	-	60MB	6KG
	30IW	-	-	-	-	-	-
	-	-	-	1000MW	-	-	-
	40IW	-	-	-	-	100MB	10KG
		-	-	-	-		
	60IW	-	-	-	-	-	-
	-	-	-	1600MW	-	-	-
	-	-	-	-	-	160MB	16KG
	80IW	-	-	-	-	-	-
	-	-	-	2500MW	-	-	-
	100IW	-	-	-	-	250MB	25KG
	-	-	-	-	5#	-	-
	150IW	-	-	-	-	-	-
	-	-	-	4000MW	-	-	-
	-	-	-	-	-	400MB	40KG
	-	-	-	-	8#	-	-
	-	-	-	6000MW	-	-	-
	-	-	-	-	-	600MB	60KG
	-	-	-	-	10#	-	-

L* = Compound scale. Vacuum same range and unit of measure as pressure scale.

Distribuidor Autorizado CALFER
CALFER DE MÉXICO®
CONTROLES AUTOMÁTICOS INDUSTRIALES
50 ANIVERSARIO
www.calfer.com.mx 01 800 0125 742 /CalferMx
soporte.tecnico2@calfer.com.mx

PRESSURE GAUGES

INDUSTRIAL GAUGES

1009 Duralife 2½", 3½" 20-21
1009 Duralife 4½", 6" 22-23
1008S 40, 50mm 24-25
1008S/SL 63mm-100mm 26-27
1008S/SL Center Back 28-29
2008 Panel Gauge 30-31
1010, 1017, 1220 32-33
Standard Pressure Ranges 34
1038A, 1339A 35
1490, 1495 36
Standard Pressure Ranges 37
1020 38
1122 38
1150H 38

ASHCROFT®
Trust the shield.®

FEATURES

- ***PLUS!™*** Performance (optional) dampens vibration, shock and pulsation effects
- PowerFlex™ movement provides superior resistance to vibration, shock, and pulsation
- True Zero™ reduces reading errors by using a "zero box" instead of conventional dial pins
- Wide selection of connections

SPECIFICATIONS

Accuracy:	±1% of span (Dry) (ASME B40.100 Grade 1A) ±1.5% of span (Liquid filled)
Process Connection Location:	Lower, lower back, top, 3 o'clock, 9 o'clock
Ranges:	AW: Vacuum, compound to 1,000 psi SW: Vacuum, compound to 15,000 psi
Movement:	304 SS with glass filled polyester segment
Window Material:	Polycarbonate
Pointer:	Black, aluminum
Weather Protection:	IP65 (Plug closed), IP54 (Plug vented) NEMA 4 (Plug closed)
Mounting Option:	U-clamp, front or back flange
Dampening:	Liquid fill or ***PLUS!™*** Performance

WETTED COMPONENTS

Model	Bourdon Tube	Process Connection Material
SW	316L SS	316L SS
AW	316L SS	Aluminum bronze

NON-WETTED COMPONENTS

Case	Ring (bayonet removable)
304 SS	304 SS
316L SS (optional)	316L SS (optional)

MIN/MAX TEMPERATURE LIMITS

Version	Ambient	Process	Storage
Dry	-40°F to 200°F (-40°C to 93°C)	-40°F to 250°F (-40°C to 121°C)	-40°F to 250°F (-40°C to 121°C)
PLUS!™	-40°F to 150°F (-40°C to 66°C)	-40°F to 200°F (-40°C to 93°C)	-40°F to 150°F (-40°C to 66°C)
Glycerin Fill	20°F to 150°F (-7°C to 66°C)	20°F to 200°F (-7°C to 93°C)	0°F to 150°F (-18°C to 66°C)
Silicone Fill	-40°F to 150°F (-40°C to 66°C)	-40°F to 200°F (-40°C to 93°C)	-40°F to 150°F (-40°C to 66°C)
Halocarbon® Fill	-40°F to 150°F (-40°C to 66°C)	-40°F to 200°F (-40°C to 93°C)	-40°F to 150°F (-40°C to 66°C)

1009SW Duralife®
2½" dial size

1009AW Duralife®
2½" dial size

1009SW Duralife®
3½" dial size

1009AW Duralife®
3½" dial size

Distribuidor Autorizado CALFER
CALFER DE MÉXICO®
CONTROLES AUTOMÁTICOS INDUSTRIALES
50 ANIVERSARIO
www.calfer.com.mx 01 800 0125 742 /CalferMx
soporte.tecnico2@calfer.com.mx

ASHCROFT®
Trust the shield.®

ORDERING CODE: Example:	251009	SW	L	02	L	XC4	100#
Dial Size/Model Code							
251009 - 2½″ SS case	251009						
351009 - 3½″ SS case							
System							
AW - 316L SS tube/Aluminum, bronze connection (max. pressure 1,000 psi)							
SW - 316L SS tube/316L SS process connection (max. pressure 15,000 psi)		SW					
Case Fill							
Blank - Dry gauge							
L - Liquid filled case (glycerin standard)			L				
Process Connection Size							
02 - ¼ NPT Male				02			
04 - ½ NPT Male							
RW - SAE - 4 7/16″ - 20 Straight thread with washer, O-ring and nut							
EJ - 7/16″ X 20 UNF-3A 37° flare							
KJ - ¼″ Straight JIS, BSP - 1009SW							
KA - ¼″ Tapered JIS, BSP - 1009SW							
13 - G ¼″ DIN							
JP - ¼″ Tubing, N/A with throttle plug, N/A ranges above 6,000 psi							
JQ - 6mm Tubing, N/A with throttle plug, N/A ranges above 6,000 psi							
JL - 9/16″ 18 UNF-2A, N/A on 25 1009 lower							
Process Connection Location							
L - Lower					L		
B - Lower back							
D - Side (3 o'clock)							
E - Side (9 o'clock)							
T - Top							
Options (if choosing an option(s) must include an "X")						X__	
C4 - Individual calibration chart (in accordance with ASME B 40.100 Accuracy of unit traceable to NIST)						C4	
LL - ***PLUS!***™ Performance							
GV - Silicone case fill							
GX - Halocarbon® case fill							
TU - Throttle plug, (1,000 psi max pressure)							
TS - Throttle screw, (15,000 psi max pressure)							
6B - Cleaned for oxygen service (SW system only)							
SG - Safety glass							
EO - Adjustable red set hand, (N/A with liquid fill)							
SH - Red set hand, stationary							
NH - SS tag wired to case							
FF - Front flange							
BF - Back flange							
UC - U-clamp							
SM - All SS movement							
YW - 316L SS case and ring							
Range (see range table on page 34 for all standard ranges)							
100# - 100 psi							100#

Distribuidor Autorizado CALFER
CALFER DE MÉXICO®
CONTROLES AUTOMÁTICOS INDUSTRIALES
50 ANIVERSARIO
www.calfer.com.mx 01 800 0125 742 /CalferMx
soporte.tecnico2@calfer.com.mx

ASHCROFT®
Trust the shield.®

FEATURES

- ***PLUS!***™ Performance (optional) dampens vibration, shock and pulsation effects
- Dry and liquid filled versions

SPECIFICATIONS

Accuracy:	±1% of span (ASME B40.100 Grade 1A)
Process Connection Location:	Lower or lower back
Ranges:	A - Bronze: Vacuum, compound to 1,000 psi S - SS: Vacuum, compound to 20,000 psi P - Monel®: Vacuum, compound to 30,000 psi
Window Material:	Glass
Pointer:	Micrometer, adjustable
Weather Protection:	Dry Case: IP54 Liquid filled or hermetically sealed case: IP 65
Mounting Option:	U-clamp, front flange and back flange
Dampening:	***PLUS!***™ Performance and liquid fill

WETTED COMPONENTS

Model	Bourdon Tube	Process Connection Material
1009A	Bronze	Brass
1009S	316L SS	316L SS
1009P	Monel®	Monel®

NON-WETTED COMPONENTS

Model	Case	Ring
1009	304 SS	304 SS, bayonet

MIN/MAX TEMPERATURE LIMITS

Version	Ambient	Process	Storage
Dry	-20°F to 200°F (-29°C to 93°C)	-20°F to 250°F (-29°C to 121°C)	-40°F to 250°F (-40°C to 121°C)
PLUS!™	-40°F to 150°F (-40°C to 66°C)	-40°F to 200°F (-40°C to 93°C)	-40°F to 150°F (-40°C to 66°C)
Glycerin Fill	20°F to 150°F (-7°C to 66°C)	20°F to 150°F (-7°C to 66°C)	0°F to 150°F (-18°C to 66°C)
Silicone Fill	-40°F to 150°F (-40°C to 66°C)	-40°F to 200°F (-40°C to 93°C)	-40°F to 150°F (-40°C to 66°C)
Halocarbon® Fill	-40°F to 150°F (-40°C to 66°C)	-40°F to 200°F (-40°C to 93°C)	-40°F to 150°F (-40°C to 66°C)

1009
4½ dial size

1009
6″ dial size

Distribuidor Autorizado CALFER
CALFER DE MÉXICO®
CONTROLES AUTOMÁTICOS INDUSTRIALES
50 ANIVERSARIO
www.calfer.com.mx 01 800 0125 742 /CalferMx
soporte.tecnico2@calfer.com.mx

ASHCROFT®
Trust the shield.®

ORDERING CODE: Example:	45	1009	A	L	02	L	XC4	100#
Dial Size								
45 - 4½" SS gauge	45							
60 - 6" SS gauge								
Model Code								
1009 - 304 SS case, open front		1009						
System								
A - Phosphor bronze tube/brass process connection, (1,000 psi max.)			A					
S - 316L SS tube/316L SS process connection, (20,000 psi max.)								
P - K-Monel® 500 tube, Monel® 400 process connection, (30,000 psi max.)								
Case Fill								
Blank - dry gauge								
L - Liquid filled case (glycerin standard)				L				
Process Connection Size								
02 - ¼ NPT Male, max pressure 20,000 psi					02			
04 - ½ NPT Male, max pressure 20,000 psi								
09 - 9/16"-18 UNF-2B Aminco® high pressure fitting, (standard for pressures over 20,000 psi)								
Process Connection Location								
L - Lower						L		
B - Lower back								
Options (if choosing an option(s) must include an "X")							X__	
C4 - Individual calibration chart (in accordance with ASME B 40.100 Accuracy of unit traceable to NIST)							C4	
LL - ***PLUS!***™ Performance								
GV - Silicone case fill								
GX - Halocarbon® case fill								
LJ - Hermetically sealed								
TS - Throttle screw (standard with hermetically sealed or liquid filled gauge)								
6B - Cleaned for oxygen service (SW system only)								
PD - Plastic window (standard with hermetically sealed or liquid filled gauge)								
SG - Safety glass								
EP - Maximum pointer, adjustable (not available with liquid fill)								
EO - Adjustable red set hand, (N/A with liquid fill)								
SH - Red set hand, stationary								
NH - SS tag wired to case								
FF - Front flange								
BF - Back flange								
UC - U-clamp								
SM - All SS movement								
Range (see range table on page 34 for all standard ranges)								
100# - 100 psi								100#

Distribuidor Autorizado CALFER
CALFER DE MÉXICO®
CONTROLES AUTOMÁTICOS INDUSTRIALES
50 ANIVERSARIO
www.calfer.com.mx 01 800 0125 742 /CalferMx
soporte.tecnico2@calfer.com.mx

ASHCROFT®
Trust the shield.®

FEATURES

- All-stainless steel construction
- True Zero™ reduces reading errors by using a “zero box” instead of conventional dial pins
- FlutterGuard™ (optional) reduces movement wear and pointer flutter

SPECIFICATIONS

Accuracy:	±3-2-3% of span (ASME, B40.100 Grade B)
Process connection location	Lower and center back
Ranges:	40mm: Vacuum, compound to 15,000 psi 50mm: Vacuum, compound to 20,000 psi
Movement:	304 SS, gear type
Window:	Polycarbonate
Pointer:	Black, aluminum
Weather Protection:	NEMA 4/IP66
Dampening Options:	FlutterGuard™ and throttle plugs

WETTED COMPONENTS

Model	Bourdon Tube	Process Connection Materials	Joints
1008S	316L SS	316 SS	Welded

NON-WETTED COMPONENTS

Model	Case	Ring
1008S	304 SS (standard)	304 SS (standard) crimped

MIN/MAX TEMPERATURE LIMITS

Version	Ambient	Process	Storage
Dry	-40°F to 200°F (-40°C to 93°C)	-40°F to 250°F (-40°C to 121°C)	-40°F to 200°F (-40°C to 93°C)
Glycerin Fill	20°F to 150°F (-7°C to 66°C)	20°F to 200°F (-7°C to 93°C)	0°F to 150°F (-18°C to 66°C)
Silicone Fill	-40°F to 150°F (-40°C to 66°C)	-40°F to 200°F (-40°C to 93°C)	-40°F to 150°F (-40°C to 66°C)
Halocarbon® Fill	-40°F to 150°F (-40°C to 66°C)	-40°F to 200°F (-40°C to 93°C)	-40°F to 150°F (-40°C to 66°C)

1008S
50mm dial size
Lower connection

1008S
50mm dial size
Center back connection
with U-clamp

1008S
40mm dial size
Back connection

1008S
40mm dial size
Lower connection

Distribuidor Autorizado CALFER
CALFER DE MÉXICO®
CONTROLES AUTOMÁTICOS INDUSTRIALES
50 ANIVERSARIO
www.calfer.com.mx 01 800 0125 742 /CalferMx
soporte.tecnico2@calfer.com.mx

ASHCROFT®
Trust the shield.®

ORDERING CODE Example:	501008	S	L	02	L	XC4	100#
Dial Size/Model Code							
401008 - 40mm dial							
501008 - 50mm dial	501008						
System							
S - 316 SS tube/316 SS process connection		S					
Case Fill							
Blank - Dry liquid fillable							
L - Liquid filled case (glycerin standard)			L				
Process Connection Size							
01 - ⅛ NPT Male							
02 - ¼ NPT Male, N/A with liquid fill on lower process connection 401008				02			
Process Connection Location							
L - Lower mount connection					L		
B - Center back connection							
Options (if choosing an option(s) must include an "X")						X__	
C4 - Individual calibration chart in accordance with ASME B 40.100 traceable to NIST							
ZY - FlutterGuard™ performance							
6B - Cleaned for oxygen service							
SG - Safety glass							
FF - Front flange							
UC - U-clamp							
NH - SS tag wired to case							
Ranges (see range table on page 34 for all standard ranges)							
Single Scale							
100# - 100 psi							100#

Distribuidor Autorizado CALFER
CALFER DE MÉXICO®
CONTROLES AUTOMÁTICOS INDUSTRIALES
50 ANIVERSARIO
www.calfer.com.mx 01 800 0125 742 /CalferMx
soporte.tecnico2@calfer.com.mx

ASHCROFT®
Trust the shield.®

FEATURES

- ***PLUS!***™ Performance (optional), dampens vibration, shock and pulsation effects
- PowerFlex™ movement provides superior resistance to vibration, shock, and pulsation
- True Zero™ reduces reading errors by using a "zero box" instead of conventional dial pins
- Ammonia and refrigerant versions available

SPECIFICATIONS

Accuracy:	±1.6% of span (Dry) ±2% of span (Liquid filled)
Process Connection Location:	Lower, lower back, top, 3 o'clock, 9 o'clock
Ranges:	Vacuum, compound to 15,000 psi
Movement:	304 SS with glass filled polyester segment
Window Material:	Polycarbonate
Pointer	Black, aluminum
Weather Protection:	IP65 (Plug closed), IP54 (Plug vented) NEMA 4 (Plug closed)
Mounting Options:	U-clamp and front flange
Dampening	Liquid fill and ***PLUS!***™ Performance

WETTED COMPONENTS

Model	Bourdon Tube	Process Connection Materials
1008S	316L SS	316 SS

NON-WETTED COMPONENTS

Model	Case	Ring
1008S	304 SS (standard)	304 SS (standard) crimped

MIN/MAX TEMPERATURE LIMITS

Version	Ambient	Process	Storage
Dry	-40°F to 200°F (-40°C to 93°C)	-40°F to 250°F (-40°C to 121°C)	-40°F to 250°F (-40°C to 121°C)
PLUS!™	-40°F to 150°F (-40°C to 66°C)	-40°F to 200°F (-40°C to 93°C)	-40°F to 150°F (-40°C to 66°C)
Glycerin Fill	20°F to 150°F (-7°C to 66°C)	20°F to 200°F (-7°C to 93°C)	0°F to 150°F (-18°C to 66°C)
Silicone Fill	-40°F to 150°F (-40°C to 66°C)	-40°F to 200°F (-40°C to 93°C)	-40°F to 150°F (-40°C to 66°C)
Halocarbon® Fill	-40°F to 150°F (-40°C to 66°C)	-40°F to 200°F (-40°C to 93°C)	-40°F to 150°F (-40°C to 66°C)

1008
63mm dial size

1008
100mm dial size

Distribuidor Autorizado CALFER

CALFER DE MÉXICO®
CONTROLES AUTOMÁTICOS INDUSTRIALES

50 ANIVERSARIO

ASHCROFT®
Trust the shield.®

ORDERING CODE Example:	631008	S	L	02	L	XC4	100#
Dial Size/Model Code							
631008 - 63mm (2½″) 304 SS case	631008						
101008 - 100mm (3½″) 304 SS case							
System							
S - 316 SS tube/316 SS process connection		S					
Case Fill							
Blank - Dry liquid fillable							
L - Liquid filled case (glycerin standard)			L				
Process Connection Size							
01 - ⅛ NPT Male							
02 - ¼ NPT Male				02			
04 - ½ NPT Male (lower only)							
RW - SAE - 4 7/16″-20 straight thread with washer, o-ring and nut							
KJ - ¼″ Straight JIS, BSP							
KA - ¼″ Tapered JIS, BSP							
13 - G ¼″ DIN							
JP - ¼″ Tubing							
JQ - 6mm Tubing, (N/A with throttle plug, N/A ranges above 6,000 psi)							
Process Connection Location							
L - Lower					L		
B - Lower back							
D - Side (3 o'clock)							
E - Side (9 o'clock)							
T - Top							
Options (if choosing an option(s) must include an "X")						X__	
LL - ***PLUS!***™ Performance							
GV - Silicone case fill							
GX - Halocarbon® case fill							
TU - Throttle plug (1,000 psi max. pressure)							
TS - Throttle plug (15,000 psi max. pressure)							
6B - Cleaned for oxygen service							
NH - SS tag wired to case							
FF - Front flange							
UC - U-clamp							
C4 - Individual calibration chart (in accordance with ASME B40.100 traceable to NIST)						C4	
SM - All SS movement							
YW - 316L SS case and ring							
Ranges (see range table on page 34 for all standard ranges)							
Single Scale							
100# - 100 psi							100#

Distribuidor Autorizado CALFER
CALFER DE MÉXICO®
CONTROLES AUTOMÁTICOS INDUSTRIALES
50 ANIVERSARIO
www.calfer.com.mx 01 800 0125 742 /CalferMx
soporte.tecnico2@calfer.com.mx

ASHCROFT®
Trust the shield.®

FEATURES

- Center back connection
- All SS construction
- True Zero™ reduces reading errors by using a "zero box" instead of conventional dial pins

SPECIFICATIONS

Accuracy:	±3-2-3% of span (ASME B40.100 Grade B)
Process Connection Location:	Center back
Ranges:	Vacuum, compound to 20,000 psi
Window Material	Polycarbonate
Pointer:	Black, aluminum
Weather Protection:	NEMA 4/IP65 (plug closed) NEMA 3/IP54 (plug vented)
Mounting Options:	U-clamp and front flange
Dampening:	FlutterGuard™ and throttle plugs

WETTED COMPONENTS

Model	Bourdon Tube	Process Connection Materials	Joints
1008S	316L SS	316 SS	Welded

NON-WETTED COMPONENTS

Model	Case	Ring
1008S	304 SS (standard) Case to Process Connection Seal: Buna-N® O-ring	304 SS (standard) crimped

MIN/MAX TEMPERATURE LIMITS

Version	Ambient	Process	Storage
Dry	-40°F to 200°F (-40°C to 93°C)	-40°F to 250°F (-40°C to 121°C)	-40°F to 250°F (-40°C to 121°C)
Glycerin Fill	20°F to 150°F (-7°C to 66°C)	20°F to 200°F (-7°C to 93°C)	0°F to 150°F (-18°C to 66°C)
Silicone Fill	-40°F to 150°F (-40°C to 66°C)	-40°F to 200°F (-40°C to 93°C)	-40°F to 150°F (-40°C to 66°C)
Halocarbon® Fill	-40°F to 150°F (-40°C to 66°C)	-40°F to 200°F (-40°C to 93°C)	-40°F to 150°F (-40°C to 66°C)

1008S
100mm dial size
back connection

1008S
63mm dial size
back connection

1008S
63mm dial size
U-clamp kit #101A164-01

1008S
63mm dial size
U-clamp

1008S
63mm dial size
retrofit kit with spacer
flange kit #101A140-06

1008S
63mm dial size retrofit kit
for oversized panel holes

1008S
63mm dial size
front flange kit
#101A164-13 push on flange

ASHCROFT®
Trust the shield.®

ORDERING CODE Example:	63	1008	S	L	02	C	XUC	100#
Dial Sizes								
63 - 63mm (2½") 304 SS case	63							
10 - 100mm (3½") 304 SS case								
Model Code								
1008 - 304 SS case		1008						
System								
S - 316 SS tube/316 SS process connection			S					
Case Fill								
Blank - Dry gauge								
L - Liquid fill (glycerin)				L				
Process Connection Size								
01 - ⅛ NPT Male								
02 - ¼ NPT male					02			
Process Connection Location								
C - Center back						C		
Options (if choosing an option(s) must include an "X")							X__	
ZY - FlutterGuard™								
UC - U-clamp mounting							UC	
FF - Front flange								
RF - Retrofit flange								
Range (see range table on page 34 for all standard ranges)								
Single Scales								
100# - 100 psi								100#

Distribuidor Autorizado CALFER
CALFER DE MÉXICO®
CONTROLES AUTOMÁTICOS INDUSTRIALES
50 ANIVERSARIO
www.calfer.com.mx 01 800 0125 742 /CalferMx
soporte.tecnico2@calfer.com.mx

2008 Panel Pressure Gauge

ASHCROFT®
Trust the shield.®

FEATURES

- ***PLUS!***™ Performance (optional) dampens vibration, shock and pulsation effects
- PowerFlex™ movement provides superior resistance to vibration, shock, and pulsation
- True Zero™ reduces reading errors by using "zero box" instead of conventional dial pins
- 3-hole front flange welded to case
- Corrosion resistant stainless steel case
- Dry gauges are field fillable
- Ventable fill plug

SPECIFICATIONS

Accuracy:	±1.6% of span (dry) ±2% of span (liquid filled)
Process Connection Location:	Lower back
Ranges:	Vacuum, compound to 15,000 psi
Movement:	304 SS with glass filled polyester segment
Window:	Polycarbonate
Pointer:	Black, aluminum
Weather Protection:	IP65 (Plug closed), IP54 (Plug vented) NEMA 4 (Plug closed)
Mounting Options:	Stem, flush, panel
Dampening Options:	***PLUS!***™ Performance, liquid fill and throttle plugs

WETTED COMPONENTS

Model	Bourdon Tube	Process Connection Materials
2008	316L SS	316 SS

NON-WETTED COMPONENTS

Model	Case	Ring
2008	304 SS (STD.) 316L SS (OPT.)	304 SS (STD.) 316L SS (OPT.)

MIN/MAX TEMPERATURE LIMITS

Version	Ambient	Process	Storage
Dry	-40°F to 200°F (-40°C to 93°C)	-40°F to 250°F (-40°C to 121°C)	-40°F to 250°F (-40°C to 121°C)
PLUS!™	-40°F to 150°F (-40°C to 66°C)	-40°F to 200°F (-40°C to 93°C)	-40°F to 150°F (-40°C to 66°C)
Glycerin Fill	20°F to 150°F (-7°C to 66°C)	20°F to 200°F (-7°C to 93°C)	0°F to 150°F (-18°C to 66°C)
Silicone Fill	-40°F to 150°F (-40°C to 66°C)	-40°F to 200°F (-40°C to 93°C)	-40°F to 150°F (-40°C to 66°C)
Halocarbon® Fill	-40°F to 150°F (-40°C to 66°C)	-40°F to 200°F (-40°C to 93°C)	-40°F to 150°F (-40°C to 66°C)

2008
63mm dial size
Panel Mount Gauges

RoHS COMPLIANT

Distribuidor Autorizado CALFER
CALFER DE MÉXICO®
CONTROLES AUTOMÁTICOS INDUSTRIALES
50 ANIVERSARIO
www.calfer.com.mx 01 800 0125 742 /CalferMx
soporte.tecnico2@calfer.com.mx

ASHCROFT®
Trust the shield.®

ORDERING CODE Example:	63	2008	S	02	B	XC4	100
Dial Size,							
63 - 63mm (2½″) 304 SS case	63						
Model Code							
2008 - 304 SS case		2008					
System							
S - 316 SS tube/316 SS process connection			S				
Process Connection Size							
01 - ⅛ NPT Male							
02 - ¼ NPT Male				02			
RW - SAE -4 7/16″ - 20 straight thread with washer, O-ring and nut							
KJ - ¼″ Straight JIS, BSP							
KA - ¼″ Tapered JIS, BSP							
13 - G ¼″ DIN							
07 - ⅛″ BSPT tapered thread							
JP - ¼″ Tubing (N/A with throttle plug)							
JQ - 6mm Tubing (N/A with throttle plug, N/A ranges above 6,000 psi)							
Process Connection Location							
B - Lower back mount connection					B		
Options (if choosing an option(s) must include an "X")						X__	
C4 - Individual calibration chart (in accordance with ASME B40.100 Accuracy traceable to NIST)						C4	
LL - ***PLUS!***™ Performance							
GV - Silicone case fill							
GX - Halocarbon® case fill							
YW - 316L SS case and ring							
TU - Throttle plug (1,000 psi max.)							
TS - Throttlle screw (15,000 psi max.)							
6B - Cleaned for oxygen service							
SH - Red set hand, stationary							
NH - SS tag wired to case							
SM - All SS movement							
Ranges (see range table on page 34 for all standard ranges)							
Single Scale							
100# - 100 psi							100#

Distribuidor Autorizado CALFER
CALFER DE MÉXICO®
CONTROLES AUTOMÁTICOS INDUSTRIALES
50 ANIVERSARIO
www.calfer.com.mx 01 800 0125 742 /CalferMx
soporte.tecnico2@calfer.com.mx

ASHCROFT®
Trust the shield.®

FEATURES

- ***PLUS!***™ Performance (optional) dampens vibration, shock and pulsation effects
- Wide selection of Bourdon tube materials, pressure connections and pressure ranges
- Solid-front case designed for safety
- Epoxy-coated system offers superior corrosion resistance

SPECIFICATIONS

Accuracy:	±1% of span (ASME B40.100 Grade 1A)
Process Connection Location:	1017: Back 1010/1220: Lower or lower back
Ranges:	1017: Vacuum, compound to 20,000 psi 1010/1220: Vacuum, compound to 30,000 psi
Movement:	400 SS, Teflon® coated pinion gear and segment
Window Material:	Glass (standard)
Pointer:	Micrometer Adjustable
Weather Protection:	IP54
Mounting Option:	Stem, surface, flush
Dampening Options	***PLUS!***™ Performance and throttle plugs
Dial:	Aluminum, white background, black figures and intervals

WETTED COMPONENTS

Models	Bourdon Tube	Process Connection Materials
1010	Phosphor bronze tube	Brass brazed
1017	316L SS	316L SS
1220	K Monel®	K Monel®

NON-WETTED COMPONENTS

Models	Case	Ring
1010	4½″, 6″, 8½″ & 12″ Black epoxy coated aluminum solid front	4½″ and 6″ threaded, reinforced black polypropylene ring 8½″ hinged ring, black epoxy coated 12″ slip fit, steel ring black epoxy painted
1017	4½″ & 6″ black epoxy coated aluminum solid front	Hinged aluminum, black textured enamel
1220	4½″ phenolic, solid front, polycarbonate back cover 6″ black polypropylene, solid front 8½″ black aluminum, solid front	4½″ threaded, polycarbonate ring 6″ threaded, reinforced black polypropylene ring 8½″ hinged ring, black epoxy coated

MIN/MAX TEMPERATURE LIMITS

Version	Ambient	Process	Storage
Dry	-20°F to 200°F (-29°C to 93°C)	-20°F to 250°F (-29°C to 121°C)	-40°F to 250°F (-40°C to 121°C)

1010
4½″, 6″, 8½″ & 12″ dial sizes

1017
4½″ & 6″ dial sizes

1220
4½″ 6″ & 8½″ dial sizes

Distribuidor Autorizado CALFER
CALFER DE MÉXICO®
CONTROLES AUTOMÁTICOS INDUSTRIALES
50 ANIVERSARIO
www.calfer.com.mx 01 800 0125 742 /CalferMx
soporte.tecnico2@calfer.com.mx

ORDERING CODE Example:	451010	A	02	B	XC4	100#
Dial Size/Model Code						
451010 - 4½″ aluminum case, solid front	451010					
601010 - 6″ aluminum case, solid front						
851010 - 8½″ aluminum case, solid front						
121010 - 12″ aluminum case, solid front						
451017 - 4½″ aluminum case, solid front, back only						
601017 - 6″ aluminum case, solid front, back only						
451220 - 4½″ phenolic case, solid front						
601220 - 6″ polypropolene case, solid front						
851220 - 8½″ aluminum case, solid front						
System						
A - Phosphor bronze tube, brass process connection (1,000 psi max.)		A				
P - K-Monel® tube, Monel® 400 process connection (30,000 psi max.)						
S - 316L SS, (20,000 psi max.)						
Process Connection Size						
02 - ¼ NPT Male			02			
04 - ½ NPT Male						
Process Connection Location						
L - Lower						
B - Lower back				B		
Options (if choosing an option(s) must include an "X")					X__	
C4 - Individual calibration chart (in accordance with ASME B 40.100 Accuracy of unit traceable to NIST)					C4	
LL - ***PLUS!***™ Performance						
TS - Throttle screw, (standard with ***PLUS!***™)						
PD - Acrylic window						
SG - Safety glass						
EP - Maximum pointer, adjustable (4½″ and 6″ dial only) (dry only)						
SH - Red set hand, stationary						
NH - SS tag wired to case						
DA - Dial marking (text marking on dial)						
EO - Red set hand adjustable (dry only)						
EQ - Minimum pointer (dry only)						
BD - Black dial						
OS - Overload stop						
VS - Underload stop						
6B - Cleaned for oxygen service (not available with bronze/brass system)						
56 - Flush mounting ring (451220 only)						
PR - Receiver gauge						
Range (see range table on page 34 for all standard ranges)						
100# - 100 psi						100#

Distribuidor Autorizado CALFER
CALFER DE MÉXICO®
CONTROLES AUTOMÁTICOS INDUSTRIALES
50 ANIVERSARIO
www.calfer.com.mx 01 800 0125 742 /CalferMx
soporte.tecnico2@calfer.com.mx

Standard Pressure Ranges

Single Scale Models: 1008S, 1009, 1010, 1017, 1020 & 2008						Notes
	psi	bar	kPa	MPa	kg/cm²	
Vacuum	30IMV	N1BR	N100KP	N0.1MP	N1KG	
	-	N1/0.6BR	N100/60KP	N0.1/0.06MP	N1/0.6KG	
	30IMV&15#	-	-	-	-	
	-	N1/1.5BR	N100/150KP	N0.1/0.15MP	N1/1.5KG	
	30IMV&30#	-	-	-	-	
		N1/3BR	N100/300KP	N0.1/0.3MP	N1/3KG	
Compound	30IMV&60#	-	-	-	-	
	-	N1/5BR	N100/500KP	N0.1/0.5MP	N1/5KG	
		-	-	-	-	
	30IMV&100#					
		N1/9BR	N100/900KP	N0.1/9MP	N1/9KG	
	15#	1BR	100KP	0.1MP	1KG	
	-	1.6BR	160KP	0.16MP	1.6KG	
	30#	-	-	-	-	
	-	2.5BR	250KP	0.25MP	2.5KG	
	60#	4BR	400KP	0.4MP	4KG	
	-	6BR	600KP	0.6MP	6KG	
	100#	-	-	-	-	
		10BR	1000KP	1MP	10KG	
	160#	-	-	-	-	
	200#	-	-	-	-	
	-	16BR	1600KP	1.6MP	16KG	
	300#	-	-	-	-	
	-	25BR	2500KP	2.5MP	25KG	
	400#	-	-	-	-	
	600#	40BR	4000KP	4MP	40KG	
	800#	-	-	-	-	
	-	60BR	6000KP	6MP	60KG	
	1000#	-	-	-	-	
	1500#	100BR	10000KP	10MP	100KG	
	2000#	-	-	-	-	
	-	160BR	16000KP	16MP	160KG	
	3000#	-	-	-	-	
	-	250BR	25000KP	25MP	250KG	
	4000#	-	-	-	-	
	5000#	-	-	-	-	
	6000#	400BR	40000KP	40MP	400KG	
	-	600BR	60000KP	60MP	600KG	
	8000#	-	-	-	-	
	10000#	-	-	-	-	
	15000#	1000BR	100000KP	100MP	1,000KG	
	20000#					4½″, 6″ 1009, 1010, 1017 SS systems only
	30000#					4½″, 6″ 1009, 1010, 1017 Monel® systems only

Positive Pressure

Distribuidor Autorizado CALFER
CALFER DE MÉXICO®
CONTROLES AUTOMÁTICOS INDUSTRIALES
50 ANIVERSARIO
www.calfer.com.mx 01 800 0125 742 /CalferMx
soporte.tecnico2@calfer.com.mx

ASHCROFT®
Trust the shield.®

FEATURES

- Two independent systems and movements
- Bronze Bourdon tube and brass process connections
- Two non-adjustable red and black pointers
- Measures two independent pressure sources on one dial

1038A
4½″ dial size

1339A
4½″ dial size panel mounting back only

SPECIFICATIONS

Accuracy:	±2-1-2% of span (ASME B40.100 Grade A)
Process Connection Location:	1038A - Lower or lower back 1339A - Back
Ranges:	Compound to 30-1,000 psi
Movement:	Bronze
Window Material:	Glass
Pointer:	Non-adjustable black & red
Mounting Option:	Stem, surface or flush

WETTED COMPONENTS

Model	Bourdon Tube	Process Connection Materials
1038A 1339A	Grade A Phosphor Bronze	Brass

NON-WETTED COMPONENTS

Model	Case	Ring
1038A	Aluminum black epoxy coated	Aluminum, threaded, black epoxy coated
1339A	Aluminum black epoxy coated	Aluminum, hinged, black epoxy coated

MIN/MAX TEMPERATURE LIMITS

Version	Ambient	Process	Storage
Dry	-20°F to 200°F (-29°C to 93°C)	-20°F to 250°F (-29°C to 121°C)	-40°F to 250°F (-40°C to 121°C)

ORDERING CODE

Example:	45	1038	A	02	L	100#
Dial Size						
45 - 4½″ dial	45					
Model						
1038A - Duplex, black aluminum, open front		1038				
1339A - Duplex, black aluminum, open front, panel mount						
System						
A - Phosphor bronze tube/brass process connection			A			
Process Connection Size						
02 - ¼ NPT				02		
Process Connection Location						
L - Lower, (N/A with 1339)					L	
B - Lower Back						
Range (see range table on page 37 for all standard ranges)						
Single Scales						
100# - 100 psi						100#

Distribuidor Autorizado CALFER
CALFER DE MÉXICO®
CONTROLES AUTOMÁTICOS INDUSTRIALES
50 ANIVERSARIO
www.calfer.com.mx 01 800 0125 742 /CalferMx
soporte.tecnico2@calfer.com.mx

ASHCROFT®
Trust the shield.®

FEATURES

- Glass-filled polysulfone case material
- Re-zero screw allows for minor pointer adjustment
- Polycarbonate removeable window allows for minor zero adjustments

GOLD Service

1490
2½″, 3½″ dial size

1495
2½″, 3½″ dial size receiver gauge

SPECIFICATIONS

Accuracy:	±2-1-2% of span (ASME B40.100 Grade A)
Pointer:	Black, aluminum, fixed
Mounting Options:	Stem, flush (U-clamp for panel mounting)

WETTED COMPONENTS

Model	Diaphragm	Process Connection Material
1490, 1495	Beryllium copper diaphragm	Brass

NON-WETTED COMPONENTS

Model	Case	Ring/Window (one piece)
1490, 1495	Black, glass filled polysulfone	Threaded polycarbonate, ¼ turn

MIN/MAX TEMPERATURE LIMITS

Model	Process
1490, 1495	-20°F to 200°F (-29°C to 93°C)

ORDERING CODE

Example:	35	1490	A	02	B	XUC	10IWC
Dial Size							
25 - 2½″							
35 - 3½″	35						
Model Code							
1490 - Glass filled polysulfone case		1490					
1495 - Glass filled polysulfone case							
Wetted Material							
A - Beryllium copper, brass, polysulfone, RTV silicone			A				
Process Connection Size							
01 - ⅛ NPT Male							
02 - ¼ NPT Male				02			
Process Connection Location							
L - Lower					B		
B - Center Back							
Options (if choosing an option(s) must include an "X")						X__	
AN - 1% Accuracy							
NH - SS tag							
NN - Paper tag							
TU - Thottle plug (throttle plug must be installed for intermittent or continuous use on natural gas service)							
UC - U-clamp						UC	
ZY - FlutterGuard™							
Range (see range table on page 37 for all standard ranges)							
10IW - 0/10 IWC							10IWC

Distribuidor Autorizado CALFER
CALFER DE MÉXICO®
CONTROLES AUTOMÁTICOS INDUSTRIALES
50 ANIVERSARIO
www.calfer.com.mx 01 800 0125 742 /CalferMx
soporte.tecnico2@calfer.com.mx

ASHCROFT®
Trust the shield.®

1038A, 1339A Standard Ranges Code - Single Scale

	psi	bar	kPa
Compound	30IMV&15#		
		N1/1.5BR	N100/150KP
	30IMV&30#		
		N1/3BR	N100/300KP
	30IMV&60#		
		N1/5BR	N100/500KP
	30IMV&100#		
		N1/9BR	N100/900KP
	30IMV&150#		
		N1/15BR	N1C/1500KP*
	30IMV&300#		
		N1/24BR	N1C/2400KP*
Positive Pressure	30#	-	-
	-	2.5BR	250KP
	60#	4BR	400KP
	-	6BR	600KP
	100#	-	-
	-	10BR	1000KP
	160#	-	-
	200#	-	-
	-	16BR	1600KP
	300#	-	-
	-	25BR	2500KP
	400#	-	-
	600#	40BR	4000KP
	800#	-	-
	-	60BR	6000KP
	1000#	-	-

*C = 00

1495 Reciever Gauge Standard Ranges Code

Input Signal Range PSI	Single Scale	Dual Scale	Inner / Outer
3-15#	0-100%		
3-15#	0-10sq rt		
3-15#		0-10 sq rt/0-100linear	

1490 Standard Ranges Code- Single Scale

	psi	inH_2O	oz/in^2	kPa	$cm\ H_2O$
Vacuum				N2.5KP	
		15IWV			
				N4KP	
		30IWV			
				N10KP	
		60IWV			
				N16KP	
				N25KP	
		100IWC			
				N40KP	
		200IWV			
				N100KP	
			15ZSIV		
			30ZSIV		
			60ZSIV		
			100ZSIV		
Ccompound		N30/30IW			
			N30/30ZSI		
		N10/10IW			
					N10/60CMW
					N10/80CMW
					N20/40CMW
					N10/100CMW
					N10/120CMW
Positive Pressure		10IW		2.5KP	
		15IW			
				4KP	
					60CMW
		30IW			
				10KP	
		60IW			
				16KP	
		100IW			
				25KP	
		160IW			
				40KP	
		200IW			
		300IW		100KP	
			10ZSI		
			15ZSI		
			30ZSI		
			60ZSI		
			100ZSI		
			160ZSI		
			250ZSI		
	3#				
	5#				
	10#				
	15#				

ASHCROFT®
Trust the shield.®

1020 (Xmas Tree) Pressure Gauge

SPECIFICATIONS	
Dial Size:	4 ½"
Accuracy:	±1.0% of span (ASME B40. 100 Grade 1A)
Process Connection:	¼ NPT, ½ NPT
Case Style:	SS
Movement:	Rotary, adjustable, SS, Teflon® coated
Window Material:	Glass (XPD Acrylic, XSG Safety glass and non-glare glass optional)
Pointer:	Micrometer, adjustable aluminum
Weather Protection:	Dry case: IP64 Liquid filled or field fillable: IP65, NEMA 4

1122 (Pump & Turbine) Pressure Gauge

SPECIFICATIONS	
Dial Size:	2 ½"
Accuracy:	±2-1-2% of span (ASME B40. 100 Grade A)
Process Connection:	¼ NPT
Case Style:	SS, open front
Movement:	304 SS with glass filled polyester segment
Window Material:	Polycarbonate
Pointer:	Adjustable
Weather Protection:	Dry case: IP64 Liquid filled or field fillable: IP65, NEMA 4

1150H (Reid Vapor Test) Pressure Gauge

SPECIFICATIONS	
Dial Size:	4 ½"
Accuracy:	±0.5% of span (ASME B40. 100 Grade 2A)
Process Connection:	¼ NPT
Case Style:	Aluminum solid front
Movement:	Rotary, adjustable, 400 SS, Teflon® coated
Window Material	Glass (XPD Acrylic, XSG Safety glass and non-glare glass optional)
Pointer:	Micrometer, adjustable aluminum
Weather Protection:	Dry case: Case not sealed, recommended for weather protected environment only

PRESSURE GAUGES

COMMERCIAL GAUGES

8008A 40-41
Standard Pressure Ranges 42
1008A/AL 43
Standard Pressure Ranges 44
1005, 1005P, 1005S 45-46
1005P XUL 47
1001T 48-49
1001 XOR, 1007P XOR 50
1000, 2071A 51
12DDG, 15DDG, 23DDG 52
Standard Pressure Ranges 53

ASHCROFT®
Trust the shield.®

FEATURES

- Meets EN837-1 and ASME B40.100 specifications
- Dry gauges are field fillable
- FlutterGuard™ reduces movement wear and pointer flutter standard on dry gauges
- Custom dials available
- Accessory kits for easy panel mounting
- True Zero™ indicator, a unique safety feature

SPECIFICATIONS

Accuracy:	63mm:	±1.6% of span (EN837-1) ±1% of span (EN837-1) ±2-1-2% of span (ASME B40.100)
	100mm:	±1% of span (EN837-1)
Process Connection Location:	63mm: Lower or center back 100mm: Lower or lower back	
Movement:	Brass	
Pointer:	Black, aluminum	
Weather Protection:	IP66/NEMA 4 (water and dust ingress)	
Dampening Option:	Liquid filled	

WETTED MATERIALS

Model	Bourdon Tube	Process Conn. Material	Restrictor
8008A	Bronze (vacuum-8,700 psi, compound) 316 SS (10,000 psi-15,000 psi)	Brass	Brass

NON-WETTED MATERIALS

Model	Case	Window	Ring
8008A	304 SS	Polycarbonate, glass, or safety glass	304 SS, crimped

MIN/MAX TEMPERATURE LIMITS

Version	Process
Dry with FlutterGuard	-40°F to 158°F (-40°C to 70°C)
Glycerin Fill	-4°F to 158°F (-20°C to 70°C)
Silicone Fill	-40°F to 158°F (-40°C to 70°C)

8008A
100mm dial size

(with optional front flange)

8008A
63mm dial size

(with optional U-clamp)

Distribuidor Autorizado CALFER
CALFER DE MÉXICO®
CONTROLES AUTOMÁTICOS INDUSTRIALES
50 ANIVERSARIO
www.calfer.com.mx 01 800 0125 742 /CalferMx
soporte.tecnico2@calfer.com.mx

ASHCROFT®
Trust the shield.®

ORDERING CODE Example:	63	8008A	4	G	02	L	P	0	L	10BR	XWP
Dial Size											
63 - 63mm	63										
10 - 100mm											
Model											
8008A - Pressure gauge		8008A									
Case Material											
4 - 304 SS			4								
Fill											
F - Dry with Flutterguard™											
G - Glycerine filled				G							
S - Silicone filled											
N - Dry, Silicone free											
T - Dry, with silicone free Flutterguard™											
Process Connection Sizes											
01 - ⅛ NPT Male (63mm only)											
02 - ¼ NPT Male					02						
04 - ½ NPT Male (100mm only)											
13 - G¼B Male											
15 - G½B Male (100mm only)											
KA - ¼ BSPT											
RW - SAE-4 $^{7}/_{16}$-20 (63mm only)											
41 - M14 × 1.5 (63mm only)											
16 - M20 × 1.5 (100mm only)											
Process Connection Location											
L - Lower						L					
B - Lower-back (100mm only)											
C - Center-back (63mm only)											
T - Top											
E - 9 o'clock, left side											
D - 3 o'clock, right side											
Window Material											
P - Polycarbonate							P				
R - Regular glass											
S - Safety glass											
Case Mounting											
0 - Stem mounting								0			
1 - U-clamp											
2 - Front flange											
4 - Front flange and U-clamp											
5 - Trim ring and U-clamp											
Accuracy											
J - ±1% of span											
L - ±1.6% of span									L		
M - ±2-1-2% of span											
Ranges (coding example, see range table on page 42 for all standard ranges)											
10BR										10BR	
Options (if choosing an option(s) must include an "X")											X _ _
BM - Black primary and secondary dial scales on white background											
RM - Black primary and red secondary dial scales on white background											
WP - Omit restrictor (throttle plug)											WP
ZO - Bulk packaging											
ZP - Customer part number and description on Ashcroft label											
ZQ - Customer part number only on label (no Ashcroft)											
ZW - Customer part number and gauge description on label (no Ashcroft)											
T4 - 0.007″ Orifice restrictor											
T7 - 0.020″ Orifice restrictor											
T8 - 0.031″ Orifice restrictor											
T9 - 0.063″ Orifice restrictor											
99 - Serial number on dial											
B1 - Protective black rubber boot (63mm only)											
AR - Adjustable red indicator and min/max drag pointer											

Distribu
CALFER DE MÉXICO®
CONTROLES AUTOMÁTICOS INDUSTRIALES
50 ANIVERSARIO
www.calfer.com.mx 01 800 0125 742 /CalferMx
soporte.tecnico2@calfer.com.mx

Standard Pressure Ranges

	8008A				
	psi	bar	kPa	MPa	kg/cm²
(1)	30IMV	-1BR	-100KP	-.1MP	-1KSC
	–	-1&.6BR	-100&60KP	-.1&.06MP	-1&.6KSC
	V&15#	–	–	–	–
	–	-1&1.5BR	-100&150KP	-.1&.15MP	-1&1.5KSC
	V&30#	–	–	–	–
	–	-1&3BR	-100&300KP	-.1&.3MP	-1&3KSC
	V&60#	–	–	–	–
	–	-1&5BR	-100&500KP	-.1&.5MP	-1&5KSC
	V&100#	–	–	–	–
	–	-1&9BR	-100&900KP	-.1&.9MP	-1&9KSC
(1)	15#	1BR	100KP	.1MP	1KSC
	20#	–	–	–	–
	–	1.6BR	160KP	.16MP	1.6KSC
	30#	–	–	–	–
	–	2.5BR	250KP	.25MP	2.5KSC
	60#	4BR	400KP	.4MP	4KSC
	–	6BR	600KP	.6MP	6KSC
	100#	–	–	–	–
	120#	–	–	–	–
	–	10BR	1000KP	1MP	10KSC
	160#	–	–	–	–
	200#	–	–	–	–
	–	16BR	1600KP	1.6MP	16KSC
	300#	–	–	–	–
	–	25BR	2500KP	2.5MP	25KSC
	400#	–	–	–	–
	500#	–	–	–	–
	600#	40BR	4000KP	4MP	40KSC
	800#	–	–	–	–
	–	60BR	6000KP	6MP	60KSC
	1000#	–	–	–	–
	1500#	100BR	10000KP	10MP	100KSC
	2000#	–	–	–	–
	–	160BR	16000KP	16MP	160KSC
	3000#	–	–	–	–
	–	250BR	25000KP	25MP	250KSC
	4000#	–	–	–	–
	5000#	–	–	–	–
	6000#	400BR	40000KP	40MP	400KSC
	8000#	–	–	–	–
	–	600BR	60000KP	60MP	600KSC
	10000#	–	–	–	–
	15000#	1000BR	100000KP	100MP	1,000KSC

(1) 100mm gauge only available as liquid filled for these ranges.

ASHCROFT®
Trust the shield.®

FEATURES

- Power*Flex*™ movement provides superior resistance to shock, vibration and pulsation
- FlutterGuard™ (optional) reduces movement wear and pointer flutter
- True Zero™ indicator, a unique safety feature
- Available as dry, liquid fill or field-fillable versions

SPECIFICATIONS

Accuracy:	±3-2-3% of span (ASME B40.100 Grade B)
Process Connection Location:	Lower, center back
Movement:	Power*Flex*™ movement, Brass/polyester segment
Pointer:	Black, aluminum
Weather Protection:	Weather resistant
Dampening Options:	FlutterGuard™, liquid filled

WETTED COMPONENTS

Model	Bourdon Tube	Process Connection Materials	Restrictor
1008A/AL	Bronze (vac.-6,000 psi and compound) 316 SS (10,000 psi-15,000 psi)	Brass	Brass

NON-WETTED COMPONENTS

Model	Case	Window	Ring
1008A/AL	304 SS	Polycarbonate	304 SS, crimped

MIN/MAX TEMPERATURE LIMITS

Version	Process
Dry	-40°F to 150°F (-40°C to 65°C)
Glycerin Fill	-4°F to 150°F (-20°C to 65°C)
Silicone Fill	-40°F to 150°F (-40°C to 65°C)

1008A/AL
100mm dial size

1008A/AL
63mm dial size

ORDERING CODE

Example: 63 | 1008 | A | 02 | L | XSF | 100#

Dial Size	
63 - 63 mm (2½″)	63
10 - 100 mm (4″)	
Model	
1008	1008
Case Design	
A - Dry	A
AL - Liquid fill	
Process Connection Size	
02 ¼ NPT male	02
Process Connection Location	
L - Lower	L
B - Center back	
Options (if choosing an option(s) must include an "X")	X__
SF - FlutterGuard™- (SF includes throttle plug – Dry Gauges only)	SF
LJ - Sealed case, field fillable	
GV - Silicone fill	
UC - U-clamp (Back connection only)	
FF - Front flange	
RF - Retrofit flange (Back connection only)	
T4 - Throttle plug .007″	
T7 - Throttle plug .020″	
T9 - Throttle plug .063″	
B1 - Protective black rubber boot (63mm only)	
Range (coding example see range table on page 44 for all standard ranges)	
Single Scales	
100# - 100 psi	100#

Distribu
CALFER DE MÉXICO®
CONTROLES AUTOMÁTICOS INDUSTRIALES
50 ANIVERSARIO
www.calfer.com.mx 01 800 0125 742 /CalferMx
soporte.tecnico2@calfer.com.mx

1008A							
psi	CODE	bar	CODE	kPa	CODE	kg/cm²	CODE
30IWCHgVac/0	VAC	-1/0	VAC-ABE	-100/0	VAC-AGF	76cm/0	VAC-ADP
30IWCHgVac/0/15	15#&VAC					76cm/0/1	15/V-ADB
30IWCHgVac/0/30	30#&VAC	-1/0/1.5	30/V-AAS	-100/0/150	30/V-AFT	76cm/0/2	30/V-ADD
30IWCHgVac/0/60	60#&VAC	-1/0/3	60#-AAV	-100/0/300	60/V-AFV	76cm/0/3	60/V-BEI
						76cm/0/4	60/V-ALQ
30IWCHgVac/0/100	100#&VAC	-1/0/5	100/V-AAW	-100/0/500	100/V-AFX	76cm/0/6	100/V-BEJ
30IWCHgVac/0/160	160#&VAC	-1/0/9	160/V-AAY	-100/0/900	160/V-AFZ	76cm/0/10	160/V-ADI
						76cm/0/15	200/V-BEK
30IWCHgVac/0/300	300#&VAC	-1/0/24	300/V-AUG			76cm/0/20	300/V-BEL
30IWCHgVac/0/600	600#&VAC			0/160			
0/15	15#	0/1	15#-AAA	0/200	15#-AFB	0/1	15#-ACK
				0/160	20#-AFC		
0/30	30#	0/1.6	30#-AAB	0/200	30#-AFD	0/2	30#-ACM
		0/2.5	30#-AAD	0/250	30#-AFE	0/3	45#-ACO
0/60	60#	0/4	60#-AAF	0/400	60#-AFG	0/4	60#-ACP
0/100	100#	0/6	100#-AAG	0/600	100#-AFH	0/6	100#-ACQ
		0/7	100#-AAH	0/800	120#-BAT		
0/160	160#	0/10	160#-AAI	0/1000	160#-AFJ	0/10	160#-ACS
0/200	200#	0/16	200#-AAL	0/1600	200#-AFM	0/15	200#-BEA
0/300	300#					0/20	300#-BEB
0/400	400#	0/25	400#-AAN	0/2500	400#-AFO	0/25	400#-ACX
0/600	600#	0/40	600#-AAP	0/4000	600#-AFQ	0/35	600#-BEC
						0/40	600#-ACZ
						0/50	600#-BED
0/1000	1000#	0/60	1000#-AMK	0/6000	1000#-BAU	0/50	1000#-ANA
				0/8000	1000#-BAV	0/70	1000#-ANB
0/1500	1500#	0/100	1500#-AMM	0/10000	1500#-ATK	0/100	1500#-ANC
0/2000	2000#			0/16000	2000#-BAW	0/150	2000#-BEE
0/3000	3000#	0/160	3000#-AMO			0/160	3000#-ACE
0/4000	4000#	0/250	4000#-AMQ	0/25000	4000#-BAX	0/250	4000#-ACG
0/5000	5000#					0/350	5000#-BEF
0/6000	6000#	0/400	6000#-AUE	0/40000	6000#-ATU	0/400	6000#-BEU
						0/500	6000#-BEG
0/10000	10000#			0/60000	10000#-BAY	0/700	10000#-BEH
0/15000	15000#			0/80000	10000#-BAZ		

ASHCROFT®
Trust the shield.®

FEATURES

- Patented Power*Flex*™ movement
- True Zero™ indicator, a unique safety feature
- Customizable dial printing
- Bulk packaging available
- FlutterGuard™ (optional) reduces movement wear and pointer flutter

1005S
1½″, 2″ dial size

1005
1½″, 2″, 2½″, 3½″ dial size

1005P
1½″, 2″, 2½″, 3½″ dial size

SPECIFICATIONS

Accuracy:	±3-2-3% of span (ASME B40.100 Grade B)
Movement:	1005 1005P, 1005S: Power*Flex*™ with polyester segment
Pointer:	Black aluminum

WETTED COMPONENTS

Model	Bourdon Tube	Process Connection Materials
1005, 1005P & 1005S	Bronze	Brass

NON-WETTED COMPONENTS

Model	Case	Window
1005	Black painted steel	Polycarbonate
1005P	Black ABS	Polycarbonate
1005S	SS	Polycarbonate

MIN/MAX TEMPERATURE LIMITS

Version	Process
1005	-40°F to 150°F (-40°C to 65°C)

ORDERING CODE

Example:	20	W	1005	P	H	02	L	XAP	400#
Dial Size									
15 - 1½″									
20 - 2″	20								
25 - 2½″									
35 - 3½″									
Movement type									
W - PowerFlex™		W							
Model									
1005			1005						
Case/Window Material									
Blank - Steel/Polycarbonate									
P - ABS/Polycarbonate				P					
S - SS/Polycarbonate									
Process Connection Material									
H - Brass					H				
Process Connection Size									
01 - ⅛ NPT									
02 - ¼ NPT						02			
KJ - ¼″ straight BSPT; PT ¼ JIS									
KA - ¼″ tapered BSPT; PT ¼ JIS									
KG - ⅛″ BSPT; R ⅛									
13 - G ¼ B									
76 - G ⅛ with spigot									
77 - G ⅛ no spigot									
Process Connection Location									
L - Lower							L		
B - Center back									
T - Top									
E - Left side									
D - Right side									
Options (see table 1 on page 46 for additional options (If choosing an option(s) must include an "X")								X__	
AP - Adjustable pointer								AP	
Ranges (coding example see range table on page 46 for all standard ranges)									
Single Scale									
400# - 400 psi									400#

Distribuidor Autorizado CALFER
CALFER DE MÉXICO®
CONTROLES AUTOMÁTICOS INDUSTRIALES
50 ANIVERSARIO
www.calfer.com.mx 01 800 0125 742 /CalferMx
soporte.tecnico2@calfer.com.mx

TABLE 1 - OPTIONS (minimums may apply)

13	Glass window/chrome friction ring (not available on 1005P gauges)
14	Lexan window/chrome friction ring (available on 1005P gauges)
7F	FlutterGuard™ logo (can only be used in conjunction with XSF (FlutterGuard option)
AP	Adjustable Pointer
EP	Min/max pointer
M1	Dial marking “Supply”
M2	Dial Marking “Output”
M3	Dial marking “Instrument”
NP	Nickel plated process connection
PR	Receiver gauge (3/15 psi; 0/10 sq. root; 0/100%)
RG	Glass window/black friction ring (not available on 1005P gauges)
RL	Lexan window/black friction ring (not available on 1005P gauges)
RS	RoHS compliant
RU	UL252A listed (only available in 2″ dial Type 1005, 1005P; ranges 30-300 psi)
SF	FlutterGuard™ (includes 0.013″ orifice throttle plug)
T4	0.007″ orifice throttle plug
T5	0.013″ orifice throttle plug (0.013″ orifice throttle plug standard in ranges 1000-6000 psi)
T6	Dial Marking “Transmit”
T7	0.020″ orifice throttle plug
T9	0.063″ orifice throttle plug
TC	Telfon® tape on process connection
UC	Panel mounting sleeve (1005P gauges only)
UL	UL404 listed (2″ dial Type 1005, 1005P; ranges 1000-6000 psi)
VH	Vent hole in case
YZ	Chrome Plated case (Not available for 1005P; 1005S)
Z0	Bulk pack
ZP	Customer part number on carton/plain white label
ZQ	Customer part number printed directly on carton

TABLE 2

Model	1005																						
Dial Size	1½″	1½″	2″	2″	2″	2″	2″	2″	2″	2″	2″	2½″	2½″	2½″	2½″	3½″	3½″	3½″	3½″	3½″	3½″	3½″	3½″
Case	ABS or Steel	SS	ABS	ABS	ABS	SS	SS	SS	SS	Steel	Steel	ABS	ABS	Steel	ABS or Steel	ABS	ABS	ABS	ABS	Steel	Steel	Steel	Steel
Conn. Size	⅛	⅛	⅛	¼	¼	⅛	⅛	¼	¼	⅛	¼	⅛	⅛	⅛	¼	⅛	⅛	¼	¼	⅛	⅛	⅛	¼
Conn. Type	Lower/ Back	Back	Lower/ Back	Lower	Back	Lower	Back	Lower	Back	Lower/ Back	Lower/ Back	Lower	Back	Lower/ Back	Lower/ Back	Lower	Back	Lower	Back	Lower	Back	Lower/ Back	Lower/ Back
psi	CODE	bar	CODE	AVAILABILITY																			
30IWCHgVac/0	VAC	-1/0	VAC-ABE	•		•	•	•	•	•	•	•	•	•	•	•	•	•	•	•	•	•	•
30IWCHgVac/0/15	15#&VAC	-1/0/1.5	15/V-AAA			•	•			•	•		•	•	•	•	•	•	•	•	•		•
30IWCHgVac/0/30	30#&VAC						•	•			•		•	•	•	•	•	•	•	•	•		•
30IWCHgVac/0/60	60#&VAC	-1/0/3	60/V-AAU				•	•		•	•		•	•	•	•	•	•	•	•		•	•
30IWCHgVac/0/100	100#&VAC	-1/0/5	100/V-AAW			•	•	•			•		•	•	•	•	•	•	•	•			•
30IWCHgVac/0/160	160#&VAC		160/V-AAY				•			•			•	•	•	•	•	•	•	•			•
30IWCHgVac/0/300	300#&VAC		300/V-ABB				•						•	•	•	•	•	•	•	•			•
0/15	15#	0/1	15#-AAA	•	•	•	•	•	•	•	•	•	•	•	•	•	•	•	•	•	•	•	•
		0/1.6	20#-AAB	•	•	•	•	•	•	•	•	•	•	•	•	•	•	•	•	•	•	•	•
0/30	30#	0/2.5	30#-AAD	•	•	•	•	•	•	•	•	•	•	•	•	•	•	•	•	•	•	•	•
0/60	60#	0/4	60#-AAF	•	•	•	•	•	•	•	•	•	•	•	•	•	•	•	•	•	•	•	•
0/100	100#	0/6	100#-AAG	•	•	•	•	•	•	•	•	•	•	•	•	•	•	•	•	•	•	•	•
		0/7	100#-AAH	•	•	•	•	•	•	•	•	•	•	•	•	•	•	•	•	•	•	•	•
0/160	160#	0/10	160#-AAI	•	•	•	•	•	•	•	•	•	•	•	•	•	•	•	•	•	•	•	•
0/200	200#	0/16	200#-AAL	•	•	•	•	•	•	•	•	•	•	•	•	•	•	•	•	•	•	•	•
0/300	300#			•	•	•	•	•	•	•	•	•	•	•	•	•	•	•	•	•	•	•	•
0/400	400#	0/25	300#-AAN	•	•	•	•	•	•	•	•	•	•	•	•	•	•	•	•	•	•	•	•
0/600	600#	0/40	600#-AAP	•		•	•	•	•	•	•	•	•	•	•	•	•	•	•	•	•	•	•
0/1000	1000#	0/60	1000#-AMK	•			•	•					•		•			•	•	•			•
0/1500	1500#	0/100	1500#-AMM				•	•					•		•			•		•			
0/2000	2000#	0/160	2000#-AMO				•	•					•		•			•	•	•			•
0/3000	3000#						•	•					•		•			•	•	•			•
0/4000	4000#	0/250	4000#-AMQ				•	•					•		•			•	•	•			•
0/5000	5000#						•	•					•		•			•	•	•			•
0/6000	6000#	0/400	6000#-AUE				•	•					•		•			•	•	•			•
kPa	CODE	kg/cm²	CODE	AVAILABILITY																			
-100/0	VAC-AGF	76cmHG/0	VAC-ADP	•		•	•	•	•	•	•	•	•	•	•	•	•	•	•	•	•	•	•
		76cmHG/0/1	15/V-ADB			•	•			•	•		•	•	•	•	•	•	•	•	•		•
-100/0/150	30/V-AFT	76cmHG/0/2	30/V-ADD				•	•			•		•	•	•	•	•	•	•	•	•		•
-100/0/300	60/V-AFV	76cmHG/0/3	60/V-BEI				•	•		•	•		•	•	•	•	•	•	•	•		•	•
		76cmHG/0/4	60/V-ALQ				•	•			•		•	•	•	•	•	•	•	•		•	•
-100/0/500	100/V-AFX	76cmHG/0/6	100/V-BEJ			•	•	•			•		•	•	•	•	•	•	•	•			•
-100/0/900	160/V-AFZ	76cmHG/0/6	160/V-ADI				•			•			•	•	•	•	•	•	•	•			•
		76cmHG/0/20	300/V-BEL				•						•	•	•	•	•	•	•	•			•
0/100	15#-AFB	0/1	15#-ACK	•	•	•	•	•	•	•	•	•	•	•	•	•	•	•	•	•	•	•	•
0/160	20#-AFC			•	•	•	•	•	•	•	•	•	•	•	•	•	•	•	•	•	•	•	•
0/200	30#-AFD	0/2	30#-ACM	•	•	•	•	•	•	•	•	•	•	•	•	•	•	•	•	•	•	•	•
0/250	30#-AFE	0/3	45#-ACO	•	•	•	•	•	•	•	•	•	•	•	•	•	•	•	•	•	•	•	•
0/400	60#-AFG	0/4	60#-ACP	•	•	•	•	•	•	•	•	•	•	•	•	•	•	•	•	•	•	•	•
0/600	100#-AFH	0/6	100#-ACQ	•	•	•	•	•	•	•	•	•	•	•	•	•	•	•	•	•	•	•	•
0/800	120#-BAT			•	•	•	•	•	•	•	•	•	•	•	•	•	•	•	•	•	•	•	•
0/1000	160#-AFJ	0/10	160#-ACS	•	•	•	•	•	•	•	•	•	•	•	•	•	•	•	•	•	•	•	•
0/1600	200#-AFM	0/15	200#-BEA	•	•	•	•	•	•	•	•	•	•	•	•	•	•	•	•	•	•	•	•
		0/20	300#-BEB	•	•	•	•	•	•	•	•	•	•	•	•	•	•	•	•	•	•	•	•
0/2500	400#-AFO	0/25	400#-ACX	•		•	•	•	•	•	•	•	•	•	•	•	•	•	•	•	•	•	•
0/4000	600#-AFQ	0/35	600#-BEC	•		•	•	•	•	•	•	•	•	•	•	•	•	•	•	•	•	•	•
		0/40	600#-ACZ	•		•	•	•	•	•	•	•	•	•	•	•	•	•	•	•	•	•	•
		0/50	600#-BED	•		•	•	•	•	•	•	•	•	•	•	•	•	•	•	•	•	•	•
0/6000	1000#-BAU	0/70	1000#-ANB	•			•	•					•		•			•	•	•			•
0/8000	1000#-BAV			•			•	•					•		•			•	•	•			•
0/10000	1500#-ATK	0/100	1500#-ANC				•	•					•		•			•		•			
0/16000	2000#-BAW	0/150	2000#-BEE				•	•					•		•			•	•	•			•
0/25000	4000#-BAX	0/250	4000#-ANG				•	•					•		•			•	•	•			•
		0/350	5000#-BEF				•	•					•		•			•	•	•			•
0/40000	6000#-ATU	0/500	6000#-BEG				•	•					•		•			•	•	•			•

FOR DUAL SCALE RANGES CONSULT FACTORY

Distribuidor Autorizado CALFER

CALFER DE MÉXICO®
CONTROLES AUTOMÁTICOS INDUSTRIALES

50 ANIVERSARIO

www.calfer.com.mx 01 800 0125 742 /CalferMx

soporte.tecnico2@calfer.com.mx

ASHCROFT®
Trust the shield.®

FEATURES

- UL393 listed, UL Canada listed, FM approved
- Patented Power*Flex*™ movement
- True Zero™ indicator, a unique safety feature
- "Water" or "Air" gauges available for wet/dry sprinkler installation
- Custom dials available

SPECIFICATIONS

Accuracy:	±3-2-3% of span (ASME B40.100 Grade B)
Process Connection Location:	Lower
Movement:	Power*Flex*™ movement, Brass/polyester segment
Pointer:	Black, aluminum
Weather Protection:	Weather resistant

WETTED COMPONENTS

Model	Bourdon Tube	Process Connection Materials
35W1005P-XUL	Bronze	Brass

NON-WETTED COMPONENTS

Model	Case	Window
35W1005P-XUL	ABS (Polycarbonate blend)	Polycarbonate

MIN/MAX TEMPERATURE LIMITS

Version	Process
35W1005P-XUL	-40°F to 150°F (-40°C to 65°C)

1005P XUL
3½″ dial size

ORDERING CODE

Example:	35	W	1005	P	H	02	L	XULZ0	100#
Dial Size									
35 - 3½″	35								
Movement Type									
W - PowerFlex™		W							
Model									
1005			1005						
Case/Window Material									
P - ABS/Polycarbonate				P					
Process Connection Material									
H - Brass					H				
Process Connection Size									
02 - ¼ NPT						02			
Process Connection Location									
L - Lower							L		
Options (if choosing an option(s) must include an "X")								X__	
UL - (required - UL393 listed and FM approved)								UL	
ZO - Bulk pack								ZO	
ZP - Customer part number on carton/plain white label									
ZQ - Customer part number printed directly on carton									
Ranges									
Single Scale									
100# - 0/80psi retard to 250psi outer scale									100#
300# - 0/300psi outer scale									
600# - 0/600psi outer scale									
Dual Scale (psi/kPa)									
100#-AGN - 0/80psi; 0/550 kPa retard to 1750 kPa inner scale									
300#-AGS - 0/300psi; 0/2000 kPa inner scale									
600#-AGV - 0/600psi; 0/4000 kPa inner scale									
Triple Scale (psi/kPa/bar)									
100#-CAA - 0/80psi retard to 250psi outer scale; 0/550 kPa retard to 1750 kPa middle scale; 0/5.5 bar retard to 17.5 bar inner scale									
300#-CAB - 0/300psi outer scale; 0/2000 kPa middle scale; 0/20 bar inner scale									
600#-CAC - 0/600psi outer scale; 0/4000 kPa middle scale; 0/40 bar inner scale									

Distribuidor Autorizado CALFER
CALFER DE MÉXICO®
CONTROLES AUTOMÁTICOS INDUSTRIALES
50 ANIVERSARIO
www.calfer.com.mx 01 800 0125 742 /CalferMx
soporte.tecnico2@calfer.com.mx

1001T Panel Mount Pressure Gauge

ASHCROFT®
Trust the shield.®

FEATURES

- ¼ turn polycarbonate window provides better dial visibility
- FlutterGuard™ (optional) reduces movement wear and pointer flutter
- True Zero™ indicator, a unique safety feature

SPECIFICATIONS

Accuracy:	±3-2-3% span (ASME B40.100 Grade B)
Process Connection Location:	Back
Movement:	PowerFlex with polyester
Pointer	Black, aluminum
Mounting Options:	Flush (U-clamp) Front Flange (2″ and 2½″ only)

WETTED COMPONENTS

Model	Bourdon Tube	Process Connection Materials
1001T	Bronze	Brass

NON-WETTED COMPONENTS

Model	Case	Window
1001T	Steel	Polycarbonate

MIN/MAX TEMPERATURE LIMITS

Version	Process
1001T	-40°F to 150°F (-40°C to 65°C)

1001T-XFF
2″, 2½″ dial sizes

1001T-XUC
1½″, 2″, 2½″, 3½″ dial sizes

TABLE 1

Model	1001T						
Dial Size	1½″	2″	2″	2½″	2½″	3½″	3½″
Conn. Size	⅛ NPT	⅛ NPT	¼ NPT	⅛ NPT	¼ NPT	⅛ NPT	¼ NPT

psi	CODE	bar	CODE	kPa	CODE	kg/cm²	CODE							
30inHg Vac	VAC	-1/0	VAC-ABE	-100/0	VAC-AGF	76cmHg/0	VAC-ADP	•	•	•	•	•		•
30inHg/0/15	15#&VAC	-1/0/1.5	15/V-AAS			76cmHg/0/1	15/V-ADB		•	•	•	•		•
30inHg/0/30	30#&VAC			-100/0/150	30/V-AFT	76cmHg/0/2	30/V-ADD		•	•	•	•		•
30inHg/0/60	60#&VAC	-1/0/3	60/V-AAU	-100/0/300	60/V-AFV	76cmHg/0/4	60/V-BEI		•	•	•	•		•
30inHg/0/100	100#&VAC	-1/0/5	100/V-AAW	-100/0/500	100/V-AFX	76cmHg/0/6	100/V-BEJ		•	•	•	•		•
30inHg/0/160	160#&VAC	-1/0/9	160/V-AAY	-100/0/900	160/V-AFZ	76cmHg/0/10	160/V-ADI		•	•	•	•		•
30inHg/0/300	300#&VAC	-1/0/15	300/V-ABB			76cmHg/0/20	300/V-BEL		•	•	•	•		
0/15	15#	0/1	15#-AAA	0/100	15#-AFB	0/1	15#-ACK	•	•	•	•	•		•
0/30	30#	0/2.5	30#-AAD	0/200	30#-AFD	0/2	30#-ACM	•	•	•	•	•	•	•
				0/250	30#-AFE			•	•	•	•	•	•	•
0/60	60#	0/4	60#-AAF	0/400	60#-AFG	0/4	60#-ACP	•	•	•	•	•	•	•
0/100	100#	0/7	100#-AAH	0/600	100#-AFH	0/6	100#-ACQ	•	•	•	•	•	•	•
0/160	160#	0/10	160#-AAI	0/1000	160#-AFJ	0/10	160#-ACS	•	•	•	•	•	•	•
0/200	200#	0/16	200#-AAL	0/1600	200#-AFM	0/15	200#-BEA	•	•	•	•	•	•	•
0/300	300#					0/20	300#-BEB	•	•	•	•	•	•	•
0/400	400#	0/25	400#-AAN	0/2500	400#-AFO	0/25	400#-ACX	•	•	•	•	•	•	•
0/600	600#	0/40	600#-AAP	0/4000	600#-AFQ	0/50	600#-BED	•	•	•	•	•	•	•
0/1000	1000#	0/60	1000#-AMK	0/6000	1000#-BAU	0/70	1000#-ANB	•		•		•		•
0/1500	1500#	0/100	1500#-AMM	0/10000	1500#-ATK	0/100	1500#-ANC			•		•		•
0/2000	2000#	0/160	2000#-AMO	0/16000	2000#-BAW	0/150	2000#-BEE			•		•		•
0/3000	3000#									•		•		•
0/4000	4000#	0/250	4000#-AMQ	0/25000	4000#-BAX	0/250	4000#-ANG			•		•		•
0/5000	5000#					0/350	5000#-BEF			•		•		•
0/6000	6000#	0/400	6000#-AUE	0/40000	6000#-ATU	0/500	6000#-BEG			•		•		•

Distribuidor Autorizado CALFER
CALFER DE MÉXICO®
CONTROLES AUTOMÁTICOS INDUSTRIALES
50 ANIVERSARIO
www.calfer.com.mx 01 800 0125 742 /CalferMx
soporte.tecnico2@calfer.com.mx

ASHCROFT®
Trust the shield.®

ORDERING CODE Example:	20	W	1001T	H	02	B	XAP	100#
Dial Size								
15 - 1½″								
20 - 2″	20							
25 - 2½″								
35 - 3½″								
Movement Type								
W - PowerFlex™		W						
Model - Case/Window Material								
1001T - Black painted steel, ¼ turn polycarbonate window			1001T					
Process Connection Material								
H - Brass				H				
Process Connection Size								
01 - ⅛ NPT								
02 - ¼ NPT					02			
KJ - ¼″ Straight BSPT; PT ¼ JIS								
KA - ¼″ Tapered BSPT; PT ¼ JIS								
KG - ⅛″ BSPT; R ⅛								
13 - G ¼ B								
76 - G ⅛ With spigot								
77 - G ⅛ No spigot								
FP - 37 Degree flare								
Process Connection Location								
B - Center back						B		
Options – (minimums apply for optional features (If choosing an option(s) must include an "X")							X_ _	
UC - Studs on gauge case with u-clamp and nuts (not available with FF)								
FF - Front flange case with 3 mounting holes in flange (2″ and 2½″ only) (not available with UC)								
7F - FlutterGuard™ logo on dial (can only be used in conjunction with SF option)								
AP - Adjustable pointer							AP	
EP - Min/max pointer								
M1 - Dial marking "Supply"								
M2 - Dial Marking "Output"								
M3 - Dial marking "Instrument"								
NP - Nickel plated process connection								
OR - Refrigeration application								
PR - Receiver gauge (3/15 psi; 0/10 sq. root; 0/100%)								
RS - RoHS compliant								
SF - FlutterGuard (includes 0.013″ orifice throttle plug)								
T4 - 0.007″ orifice throttle plug								
T5 - 0.013″ orifice throttle plug (standard for ranges 1000-6000 psi)								
T6 - Dial marking "Transmit"								
T7 - 0.020″ Orifice throttle plug								
T9 - 0.063″ Orifice throttle plug								
VH - Vent hole in case								
YZ - Chrome plated case								
ZO- Bulk pack								
ZP - Customer part number on carton/plain white label								
ZQ - Customer part number printed directly on carton								
Ranges (see Table 1 on page 48 - Single Scale (for dual scale contact factory)								
12# - 0-12 psi (receiver gauges only)								
15# - 0-15 psi								
30# - 0-30 psi								
60# - 0-60 psi								
100# - 0-100 psi								100#
160# - 0-160 psi								
200# - 0-200 psi								
300# - 0-300 psi								
400# - 0-400 psi								
600# - 0-600 psi								
1000# - 0-1,000 psi								
1500# - 0-1,500 psi								
2000# - 0-2,000 psi								
3000# - 0-3,000 psi								
4000# - 0-4,000 psi								
6000# - 0-6,000 psi								
VAC - 30inHg-0								
15#/Vac - 30inHg/0-15 psi								
30#/Vac - 30inHg/0-30 psi								
60#/Vac - 30inHg/0-60 psi								
100#/Vac - 30inHg/0-100 psi								
160#/Vac - 30inHg/0-160 psi								
300#ß/Vac - 30inHg/0-300 psi								
Consult factory for metric or dual scale ranges								

Distribuidor Autorizado CALFER
CALFER DE MÉXICO®
CONTROLES AUTOMÁTICOS INDUSTRIALES
50 ANIVERSARIO
www.calfer.com.mx 01 800 0125 742 /CalferMx
soporte.tecnico2@calfer.com.mx

1001T XOR, 1007P XOR Refrigerant Pressure Gauge

ASHCROFT®
Trust the shield.®

FEATURES

- Power*Flex*™ movement provides superior resistance to shock, vibration and pulsation
- FlutterGuard™ (optional) reduces movement wear and pointer flutter
- Easy access window for minor span adjustments
- 1007P ABS case offers durability and corrosion resistance
- 1001T gauges are tested to detect leaks as small as 2.8 x 10^{-4} cc per second

SPECIFICATIONS

Accuracy:	±1% of span at zero, ±2% of span the first three fourths of scale, ±5% of span the last fourth of scale
Process Connection Location:	1001T: Back 1007P: Lower
Movement:	Patented Power*Flex*™ with polyester segment and FlutterGuard™. Slotted span screw for minor span adjustments
Pointer:	Black, aluminum
Dampening Options:	FlutterGuard™ and throttle plugs
Restrictor:	1001T: 0.013″ orifice throttle plug 1007P: 0.020″ orifice throttle plug
Refrigerant Scales:	R12, R22, R502, R134A, 410A

WETTED COMPONENTS

Model	Bourdon Tube	Process Connection Materials	Restrictor
1001T	Bronze	Brass	Brass
1007P	Bronze	Brass	Brass

NON-WETTED COMPONENTS

Model	Case	Window
1001T	Black painted steel	¼ turn threaded polycarbonate
1007P	Blue ABS (low pressure) Red ABS (high pressure)	Threaded polycarbonate

MIN/MAX TEMPERATURE LIMITS

Version	Process
1001T, 1007P	-40°F to 150°F (-40°C to 65°C)

1001T XOR
2½″, 3½″ dial size

1007P XOR
2½″ dial size

ORDERING CODE

Example:	25W1001T	H	01	B	XOR	140#/V-6294
Dial Size/Model						
25W1001T - 2½″ - black steel case	25W1001T					
25W1007P - 2½″ - ABS case						
Process Connection Material						
H - Brass		H				
Process Connection Size						
01 - ⅛ NPT Male			01			
02 - ¼ NPT Male, (N/A 1007P)						
Connection Location						
L - Lower connection, (1007P only)						
B - Back connection, (1001T only)				B		
Options (if choosing an option(s) must include an “X”)					X _ _	
OR - Refrigeration application					OR	
Range (coding examples only see range table on page 53 for all standard ranges)						
Single Scales						
140#/V-6294 - 30inHG vac/0/120 psi, retard to 250 psi						140#/V-6294

Distribuidor Autorizado CALFER
CALFER DE MÉXICO®
CONTROLES AUTOMÁTICOS INDUSTRIALES
50 ANIVERSARIO
www.calfer.com.mx 01 800 0125 742 /CalferMx
soporte.tecnico2@calfer.com.mx

ASHCROFT®
Trust the shield.®

FEATURES

- Power*Flex*™ movement provides superior resistance to shock, vibration and pulsation
- True Zero™ indicator, a unique safety feature
- FlutterGuard™ (optional) reduces movement wear and pointer flutter

2071A
4½″ dial size

SPECIFICATIONS

Accuracy:	1000: ±3-2-3% of span (ASME B40.100 Grade B) 2071A: ±2-1-2% of span (ASME B40.100, Grade A)
Process Connection: Location:	Lower
Movement:	Power*Flex*™ with polyester segment
Pointer:	1000: Black aluminum 2071A: Adjustable, black aluminum
Dampening Options:	FlutterGuard™ and throttle plugs

WETTED COMPONENTS

Model	Bourdon Tube	Process Conn. Materials
1000	Bronze	Brass
2071A	Bronze (siphon required for steam service)	Brass

NON-WETTED COMPONENTS

Model	Case	Window	Ring
1000	Steel, painted black	Plastic	Black painted steel
2071A	Aluminum, painted black with back flange	Glass	Chrome plated steel

MIN/MAX TEMPERATURE LIMITS

Version	Process
1000, 2071A	-40°F to 150°F (-40°C to 65°C)

1000
4½″ dial size

ORDERING CODE

Example:	45	W	1000H	02	L	XSF	100#
Dial Size							
45 - 4½″	45						
Movement							
W - Power*Flex*™		W					
Model - Case/Window Material							
1000H - Black painted steel case/brass process connection			1000H				
2071A - Black painted aluminum case with back flange/brass process connection							
Process Connection Size							
02 - ¼ NPT Male				02			
Process Connection Location							
L - Lower					L		
Options (if choosing an option(s) must include an "X")						X__	
SF - FlutterGuard™, (SF includes throttle plug)						SF	
NP - Nickel plated process connection							
T4 - Throttle plug 0.007″							
T5 - Throttle plug 0.013″							
T7 - Throttle plug 0.020″							
T9 - Throttle plug 0.063″							
AP - Adjustable pointer, (1000H only)							
RG - Regular glass window, (1000H only)							
PD - Acrylic window, (2071A only)							
Range (coding example see range table on page 53 for all standard ranges)							
Single Scales							
100# - 100 psi							100#

Distribu
CALFER DE MÉXICO®
CONTROLES AUTOMÁTICOS INDUSTRIALES
50 ANIVERSARIO
www.calfer.com.mx 01 800 0125 742 /CalferMx
soporte.tecnico2@calfer.com.mx

ASHCROFT®
Trust the shield.®

FEATURES

- Sealed case prevents dust, water, and corrosion
- Direct Drive technology for excellent shock resistance
- Silicone-dampened coil (optional) resists vibration effects
- UL 404 listed for compressed gas (12DDG & 15DDG)

SPECIFICATIONS

Accuracy:	12DDG/15DDG: ±2% of span at setpoint (normally 50% of span) consult factory for other setpoints UL Listed ±3.5% of span in middle three-fifths of span. 23DDG: ±5% of span
Process Connection Location:	Center back
Pointer:	Brass, painted black
Dampening Options:	Silicone dampened tube and throttle plugs
Restrictor:	Safety plug in 1,500 psi - 4,000 psi ranges

WETTED COMPONENTS

Model	Coil	Process Conn. Material
12DDG, 15DDG, & 23DDG	Beryllium copper	Brass

NON-WETTED COMPONENTS

Model	Case	Windows
12DDG, 15DDG	Stainless steel (sealed)	Polycarbonate
23DDG	ABS blend (black)	Polycarbonate

MIN/MAX TEMPERATURE LIMITS

Version	Process
12DDG, 15DDG, 23DDG	-40°F to 150°F (-40°C to 65°C)

23DDG
23mm dial size

12DDG, 15DDG
1¼″, 1½″ dial size

ORDERING CODE

Example: M- 15DDG - 01 B - 1500 S750 - XUL

Model/Dial Size						
12DDG - 1¼″, SS case						
15DDG - 1½″, SS case	15DDG					
23DDG - 0.906″ (23mm) Black, ABS blend case						
Process Connection Size						
01 - ⅛ NPT Male		01				
02 - ¼ NPT process connection, (12DDG & 15DDG only)						
Process Connection Location						
B - Back			B			
Range (coding example see range table on page 53 for all standard ranges)						
Single Scales						
1500# - 1,500 psi				1500#		
Setpoint						
S750 - 750 psi					S750	
Options (if choosing an option(s) must include an “X”)						X__
UL - UL 404 Listed 1,500 psi, 2,000 psi, 3,000 psi, 4,000 psi, including oxygen						UL
T5 - Throttle plug 0.013″						
T7 - Throttle plug 0.020″						
T9 - Throttle plug 0.063″						
XSF - Silicone dampened tube for vibration						

Distribuidor Autorizado CALFER
CALFER DE MÉXICO®
CONTROLES AUTOMÁTICOS INDUSTRIALES
50 ANIVERSARIO
www.calfer.com.mx 01 800 0125 742 /CalferMx
soporte.tecnico2@calfer.com.mx

Commercial Pressure Gauge Standard Ranges

1000 & 2071A			
psi	Code	1000	2071A
30IWCHg Vac/0	VAC	•	•
30IWCHgVac/0-15	15#&VAC	•	•
30IWCHgVac/0-30	30#&VAC	•	•
30IWCHgVac/0-60	60#&VAC	•	•
30IWCHgVac/0-100	100#&VAC	•	•
30IWCHgVac/0-160	160#&VAC	•	
30IWCHgVac/0-300	300#&VAC	•	
0/15	15#	•	•
0/30	30#	•	•
0/60	60#	•	•
0/100	100#	•	•
0/160	160#	•	•
0/200	200#	•	•
0/300	300#	•	•
0/400	400#	•	•
0/600	600#	•	•
0/1000	1000#	•	
0/2000	2000#	•	
0/3000	3000#	•	
0/4000	4000#	•	
0/5000	5000#	•	
0/6000	6000#	•	

1007P & 1001T		
Range Description	Code	
	1007P	1001T
30 in. Hg/0/120psi retard to 250psi; R502/R22/R12	140#-6288	140#-6294
30 in. Hg/0/120psi retard to 250psi; R134A	140#-6289	140#-6295
0/400psi; R502/R22/R12	400#-6290	400#-6296
0/400psi; R134A	400#-6291	400#-6297
30 in. Hg/0/300psi retard to 500psi; R410A	300#-6292	300#-6298
0/800psi;R410A	600#-6293	600#-6299

12/15DDG	
Range	Range code
0/60psi	60S30
0/100psi	100S50
0/160psi	160S80
0/200psi	200S100
0/300psi	300S150
0/700psi	700S350
0/1200psi	1200S600
0/1500psi	1500S750
0/2000psi	2000S1000
0/3000psi	3000S1500
0/4000psi	4000S2000

23DDG	
Range	Range code
0/60psi	60S30
0/100psi	100S50
0/160psi	160S80
0/200psi	200S100
0/300psi	300S150

PRESSURE GAUGES

DIGITAL GAUGES

DG25..... 56-57
2074, 2174, 2274 58-59
2084, 2086, 2089 60-61

DG25 General Purpose Digital Gauge

ASHCROFT®
Trust the shield.®

FEATURES

- 9 engineering units, with 1 field-programmable
- Min./Max. function feature records low and high pressure events
- Bar graph display
- Customized keypad (optional)
- All SS laser welded wetted parts

GOLD Service

SPECIFICATIONS

Accuracy:	±0.5% of span standard, ±0.25% of span optional
Process Connection Location:	Lower
Enclosure Rating:	IP67
Display:	Full 5 digital LCD
Backlight:	optional
Bar Graph:	20 segment
Battery Life:	2000+ hours continuous operation (no backlight) (2) AA alkaline batteries
Shock:	MIL-STD-202G, Method 201A
Vibration:	MIL-STD-202G, Method 213B, Test Condition K
Timer:	Auto off time programming None, 1, 5, 20 min
Z-Lock:	Prevent inadvertent zero of gauge
Update Rate:	1 second, 500 ms, 250 ms

DG25
2.73″, 70mm nominal case diameter

WETTED COMPONENTS

Model	Diaphragm	Process Connection	Joints
DG25	17-4 SS	316L SS	Laser weld

NON-WETTED COMPONENTS

Model	Case	Windows
DG25	Polycarbonate/ABS	Polycarbonate

MIN/MAX TEMPERATURE LIMITS

Version	Process	Storage
DG25	-4°F to 140°F (-20°C to 60°C)	-4°F to 140°F (-20°C to 60°C)
Batteries removed	—	-4°F to 176°F (-20°C to 80°C)

DG25
without protective boot

PRESSURE RATINGS

Overpressure:	Proof:	Burst:
15 to ≤2,000 psi	2 X Range	8 X Range
≥3,000 to ≤5,000 psi	1.5 X Range	3 X Range
≥7,500 to ≤20,000 psi	1.2 X Range	1.5 X Range

AGENCY APPROVALS

CE, UL 61010-1, CUL

Distribuidor Autorizado CALFER
CALFER DE MÉXICO®
CONTROLES AUTOMÁTICOS INDUSTRIALES
50 ANIVERSARIO
www.calfer.com.mx 01 800 0125 742 /CalferMx
soporte.tecnico2@calfer.com.mx

DG25 General Purpose Digital Gauge

ASHCROFT®
Trust the shield.®

ORDERING CODE Example:	DG	25	3	1	L	1	NA	M02	1000#	XB3
Model										
DG - DG25 Digital general purpose	DG									
Dial Size										
25 - 2.5″		25								
Accuracy										
3 - 0.25%			3							
5 - 0.5%										
Type										
1 - Battery				1						
Backlight										
L - Backlight					L					
N - No backlight										
Protective Boot										
0 - None										
1 - Black						1				
2 - Orange										
Electrical Connection										
NA - Not Applicable							NA			
Pressure Connection Size										
M01 - ⅛ NPT Male										
M02 - ¼ NPT Male								M02		
M04 - ½ NPT Male										
MG2 - G¼ B Male										
MGA - G¼ A										
F09 - 9/16-18 UNF-2B int. thread										
MR4 - R ¼ Male										
MD2 - ¼ NPT Male										
Range (coding example, see range table below for all standard ranges)										
1000# - 0-1000 psi									1000#	
Options (if choosing an option(s), must include an "X")										X__
B3 - Gauge pouch with Ashcroft logo										B3
C4 - Individual certified calibration chart										
6B - Cleaned for oxygen service										
NH - Metal tag wired to case										

DG25-SINGLE SCALE		
psi	**bar**	**Notes**
Vacuum		
0#&V	0BR&V	0.5% accuracy only
Compound		
15#&V	1BR&V	0.5% accuracy only
30#&V	1.6BR&V	0.5% accuracy only
60#&V	4BR&V	
100#&V	6BR&V	
300#&V	-1&3BR&V	

DG25-SINGLE SCALE		
psi	**bar**	**Notes**
Pressure		
15#	1BR	0.5% accuracy only
30#	1.6BR	0.5% accuracy only
60#	2.5BR	
100#	4BR	
200#	6BR	
300#	10BR	
500#	16BR	
1000#	25BR	
1500#	40BR	
2000#	60BR	
3000#	100BR	
5000#	160BR	
10000#	250BR	
15000#	400BR	
20000#	600BR	Requires use of pressure connections F09 or MD2
25000#	1000BR	Requires use of pressure connections F09 or MD2
–	1600BR	Requires use of pressure connections F09 or MD2

Consult factory for additional ranges and engineering units of measure.

Distribuidor Autorizado CALFER
CALFER DE MÉXICO®
CONTROLES AUTOMÁTICOS INDUSTRIALES
50 ANIVERSARIO
www.calfer.com.mx 01 800 0125 742 /CalferMx
soporte.tecnico2@calfer.com.mx

ASHCROFT®
Trust the shield.®

FEATURES

- Multifunctional Digital Pressure Gauge with optional 4-20mA output 1 or 2 SPDT Switches
- Large LCD display
- ±0.25% of span, Terminal Point Accuracy
- Optional FM and CSA approved Intrinsically Safe, Class I, Div. 1

GOLD Service

2074
4½″ case size

2174
3″ case size

2274
4½″ case size

SPECIFICATIONS

Accuracy:	±0.25% of span, terminal point
Process Connection Location:	Lower, top, left or right side
Input Power Requirements:	2074: Battery powered 2174: Loop Powered 4-20mA (12-36Vdc) 2274: DC line powered (12-36Vdc)
Enclosure Rating:	Weatherproof, IP65
Display:	Full 5 digital LCD
Backlight:	Optional, (battery backup required on 2174 loop powered)
Bar Graph:	10 segment
Battery Life:	3″ 450 hrs, 4½″ 2,500 hrs
Graph:	Program bar graph and scale 4-20 mA output
Switch Setpoint (Swset):	Programmable switch setpoints
Update Rate:	100 ms, 200 ms, 500 ms, 1 sec
Dampening:	None, average, 2, 4, 6, 8 times per 100 ms

WETTED COMPONENTS

Model	Diaphragm	Process Connection	Joints
2074, 2174, 2274	17-4 SS	316L SS	Laser weld

NON-WETTED COMPONENTS

Case Size	Case Material
3″	304 SS
4½″	Fiberglass reinforced thermoplastic or black epoxy coated aluminum

MIN/MAX TEMPERATURE LIMITS

Version	Process	Storage
2074, 2174, 2274	14°F to 140°F (10°C to 60°C)	–4°F to 158°F (–20°C to 70°C)

PRESSURE RATINGS

Overpressure:	Proof:	Burst:
15 to ≤2,000 psi ≥3,000 to ≤5,000 psi ≥7,500 to ≤20,000 psi	2 X Range 1.5 X Range 1.2 X Range	8 X Range 3 X Range 1.5 X Range

AGENCY APPROVALS

Optional Intrinsically Safe, FM (Class I Div. 1, Groups A-G) and CSA (Class I Div. I, Groups A-G, Class II Div. I, Groups E-G) 15,000 psi max full scale range

Distribuidor Autorizado CALFER
CALFER DE MÉXICO®
CONTROLES AUTOMÁTICOS INDUSTRIALES
50 ANIVERSARIO
www.calfer.com.mx 01 800 0125 742 /CalferMx
soporte.tecnico2@calfer.com.mx

ASHCROFT®
Trust the shield.®

ORDERING CODE Example:	45	2074	S	D	04	L	1000#	XFM
Case Size								
45 - 4.5″	45							
30 - 3.0″								
Model								
2074 - Battery Power		2074						
2174 - 4-20mA Loop								
2274 - 24Vdc Line Power								
System								
S - SS			S					
Case Style								
D - Dry				D				
Process Connection Size								
4.5″ Only								
04 - ½″ NPT					04			
15 - G ½″B								
09 - 9/16-18 UNF 2B Female								
LF - 7/16-20 w/ “O” ring seat								
3.0″ Only								
RX - 9/16-18 LH w/ Cone								
KJ - ¼″ BSPF								
SF - ¼″ VCR Swivel Female								
SM - ¼″ VCR Swive Male								
3.0″ & 4.5″								
02 - ¼″ NPT								
13 - G ¼″ B								
Process Connection Location								
L - Lower						L		
E - Left (9 o'clock)								
D - Right (3 o'clock)								
T- Top								
Range (consult factory for additional ranges and units of measure)								
Compound								
15#&V - Vac-15 psi								
30#&V - Vac-30 psi								
60#&V - Vac-60 psi								
100#&V - Vac-100 psi								
Gauge								
15# - 0-15 psi								
30# - 0-30 psi								
60# - 0-60 psi								
100# - 0-100 psi								
160# - 0-160 psi								
200# - 0-200 psi								
300# - 0-300 psi								
600# - 0-600psi								
1000# - 0-1,000 psi							1000#	
1500# - 0-1,500 psi								
2000# - 0-2,000 psi								
3000# - 0-3,000 psi								
5000# - 0-5,000 psi								
6000# - 0-6,000 psi								
8000# - 0-8,000 psi								
10000# - 0-10,000 psi								
15000# - 0-15,000 psi								
20000# - 0-20,000 psi (requires use of pressure connection 09 or RX)								
Options (if choosing an option(s) must include an “X”)								X__
BK - Battery backup								
BL - Back light for display (Model 2174 also require BK option)								
AO - 4-20mA Output (2274 only)								
U1 - 1 SPDT Switch (2274 only)								
U2 - 2 SPDT Switches (2274 only)								
FM - Factory Mutual Approval (FM not available with variation codes U1, U2, BL, AO, NH, MN, HN, AY)								FM
NH - Metal tag								
6B - Cleaned for oxygen service								
C4 - Individual certified calibration chart								
MF - Mercury free certificate								
TS - Throttle screw								
JZ - Special length cable								
3.0″ Only								
HN - Mini Hirschmann connector, 3″ only								
TU - Throttle Plug								
FF - Front flange for panel mount								
PP - Protective front cover								
B1 - Black rubber protective boot								
B2 - Orange rubber protective boot								
4.5″ Only								
EN - 3 feet jacketed cable								
AY - Aluminum case								
SU - Accu-Seal sensor at end of process connection, 2000 psi max, ½″ NPT only)								

Distribuidor Autorizado, Ashcroft

2084, 2086, 2089 Precision Digital Test Gauge

ASHCROFT®
Trust the shield.®

FEATURES

- Accuracy of up to ±0.05% of span
- Temperature Compensated from 0°F to 150°F (–18°C to 63°C)
- Weatherproof NEMA 4, IP65
- FM and CSA Approved Intrinsically Safe

GOLD Service

SPECIFICATIONS

Accuracy:	2089: ±0.05% of span accuracy 2086: ±0.10% of span accuracy 2084: ±0.25% of span accuracy Terminal Point, Total Error Band (TEB) Including Hysteresis, Linearity, Repeatability and Temperature (0°F to 150°F)
Process Connection Location:	Lower, Left, Right, Top
Enclosure Rating:	Weatherproof, IP65
Display:	Full 5 digital LCD
Backlight:	Off by default, programmable Manually turns backlight on and off
Bar Graph:	10 segment
Battery Life:	1000 hrs (3 AAA alkaline batteries)
Zero/Clear:	Zeros display and clears min. and max. values
Calibration Chart:	10 NIST Traceable chart included with 2089, optional for 2084 and 2086
Config:	Access configuration menus to select available options
Update Rate:	100 ms, 200 ms, 500 ms, 1sec

WETTED COMPONENTS

Model	Process Connection and Sensor
2084, 2086, 2089	316 SS

NON-WETTED COMPONENTS

Model	Case
2084, 2086, 2089	304 SS

MIN/MAX TEMPERATURE LIMITS

Version	Process	Storage
2084, 2086, 2089	0°F to 150°F (–18°C to 65°C)	–40°F to 180°F (–40°C to 82°C)

PRESSURE RATINGS

Overpressure:	Proof:	Burst:
Vac to ≤300 psi	2 X Range	3 X Range
>300 to ≤3,000 psi	2 X Range	5 X Range
≥5,000 to ≤7,000 psi	2 X Range	2 X Range

2089
3″ case size

AGENCY APPROVALS

FM and CSA Intrinsically Safe.
FM Class I to III, Div. 1 Groups A-G
CSA Class I, Div. 1, Groups A-D, Class II Div. 1, Groups E-G, Class 2 Div. 2 Groups F and G, Class III

Note: FM/CSA approval not valid on vacuum and 15# & vacuum ranges

Distribuidor Autorizado CALFER
CALFER DE MÉXICO®
CONTROLES AUTOMÁTICOS INDUSTRIALES
50 ANIVERSARIO
www.calfer.com.mx 01 800 0125 742 /CalferMx
soporte.tecnico2@calfer.com.mx

ASHCROFT®
Trust the shield.®

ORDERING CODE Example:	30	2089	S	D	02	L	XS7	1000#
Dial Size								
30 - 3.0″	30							
Model (Accuracy)								
2089 - ±0.05% of span		2089						
2086 - ±0.10% of span								
2084 - ±0.25% of span								
System								
S - 316 SS			S					
Case								
D - Dry				D				
Process Connection Size								
02 - ¼ NPT Male					02			
Process Connection Location								
L - Lower						L		
E - Left (9 o'clock)								
D - Right (3 o'clock)								
T - Top								
Options (if choosing an option(s) must include a "X")							X _ _	
6B - Cleaned for oxygen service								
6D - Cleaned for liquid oxygen service								
C4 - Individual certified calibration chart (included on 2089 no code required)								
S7 - Weatherproof ABS gauge carrying case							S7	
FF - Flange for panel mounting								
B1 - Protective rubber boot (black)								
B2 - Protective rubber boot (orange)								
NH - Metal tag wired to case								
NN - Paper tag bonded to case								
MF - Free from mercury certificate								
TU - Throttle plug								
MN - Mylar tag bonded to case								
Range (coding example, see range table below for all standard ranges)								
1000# - 0-1,000 psi								1000#

2084, 2086, 2089-SINGLE SCALE	
psi	**bar**
Absolute	
15#	1.6BR
25#	1BR
50#	1.6BR
Compound	
15#&V	1BR&V
30#&V	1.6BR&V
60#&V	4BR&V
100#&V	6BR&V

2084, 2086, 2089-SINGLE SCALE	
psi	**bar**
Pressure	
5#	1BR
10#	1.6BR
15#	
30#	2.5BR
60#	4BR
100#	6BR
160#	10BR
200#	16BR
	25BR
	40BR
300#	60BR
500#	
600#	160BR
800#	250BR
1000#	400BR
2000#	500BR
2500#	
3000#	
5000#	
7000#	

Consult factory for additional ranges.

Distribuidor Autorizado CALFER
CALFER DE MÉXICO®
CONTROLES AUTOMÁTICOS INDUSTRIALES
50 ANIVERSARIO
www.calfer.com.mx 01 800 0125 742 /CalferMx
soporte.tecnico2@calfer.com.mx

PRESSURE GAUGES

DIFFERENTIAL GAUGES

1130, 1131, 1132, 1133..... 64-65
1134 66
1125, 1125A, 1127, 1128 67
5503, 5509 68-69
Standard Pressure Ranges..... 70-71

ASHCROFT®
Trust the shield.®

FEATURES

- 1130: up to 6,000 psi static pressure capability
- 1131: 3,000 psi static pressure capability
- 1132: 1,500 psi static pressure capability
- 1133: 500 psi static pressure capability
- Superior magnets for smoother pointer motion
- Reed switches (optional) for direct system control
- Dry or liquid fill case

SPECIFICATIONS

Accuracy:	±2% ascending pressure full scale differential (FSD)
Process Connection Location:	In-line, lower, back
Differential Pressure Ranges:	1130: 0-5 psid to 150 psid 1131: 0-5 psid to 100 psid 1132: 0-1 psid to 60 psid 1133: 0-1 IWD to 25 IWD
Static Pressure:	1130: up to 6,000 psi 1131: 3,000 psi 1132: 1,500 psi 1133: 500 psi
Migration:	1130: Minor 1131, 1132, 1133: Zero
Maximum Process Temperature:	175°F (80°C)

WETTED COMPONENTS

Model	Actuator	O-Rings/Diaphragm	Body Material
1130	Teflon® Piston	Buna-N® optional materials available	Aluminum, brass or SS
1131	Rolling diaphragm	Buna-N® optional materials available	Aluminum, brass or SS
1132	Convoluted diaphragm	Buna-N® optional materials available	Aluminum, brass or SS
1133	Convoluted diaphragm	Buna-N® optional materials available	Aluminum or SS

Ceramic magnet & SS spring are also wetted components

NON-WETTED COMPONENTS

Model	Case Material	Window
All	SS	Glass

1130
2″, 2½″, 3½″, 4″, 4½″, 6″ dial sizes

1131
2½″, 3½″, 4″, 4½″, 6″ dial sizes

1132
2½″, 3½″, 4″, 4½″, 6″ dial sizes

1133
3½″, 4″, 4½″, 6″ dial sizes

ASHCROFT®
Trust the shield.®

ORDERING CODE Example:	20	1130	A	D	25	S	XV1	5#
Dial Size								
20 - 2″ (1130 only)	20							
25 - 2½″ (N/A on 1133)								
35 - 3½″								
40 - 4″								
45 - 4½″								
60 - 6″								
Model								
1130 - Piston actuated		1130						
1131 - Rolling diaphragm								
1132 - Small convoluted diaphragm								
1133 - Large convoluted diaphragm								
Body Material								
A - Brass (N/A on 1133)			A					
F - Aluminum								
S - SS								
Case Fill								
D - Dry				D				
L - Liquid fill (glycerin standard)								
Process Connection Size								
25 - ¼ NPT Female					25			
Process Connection Location								
S - In-Line						S		
L - Lower								
B - Back								
Options (if choosing an option(s) must include an "X")							X__	
BF - Surface mounting plate								
CS - Dual scale								
DD - Color band (any combination of green, yellow, red)								
GE - ⅛ NPTF adapters								
EP - Maximum pointer (N/A on 2″ case)								
FF - Front flange								
VD - Viton® O-rings/diaphragm								
EM - EPDM O-rings/diaphragm								
GV - Silicone fill								
C4 - Individual certified calibration chart								
NH - SS tag								
PD - Plastic window								
RP - Reverse porting (1130 only)								
SG - Safety glass (N/A on 2″ or 2½″ case)								
TM - Pipe mounting bracket, (1130 only available with in-line)								
V1 - 1-SPST switch w/DIN plug (N/A with back connection on 1130)							V1	
V2 - 1-SPST switch w/terminal strip (N/A with back connection on 1130) (N/A on 1133)								
V3 - 2-SPST switch w/DIN plug (N/A with back connection on 1130)								
V4 - 2-SPST switch w/terminal strip (N/A with back connection on 1130) (N/A on 1133)								
V5 - 1-SPDT switch w/DIN plug (N/A with back connection on 1130)								
V6 - 1-SPDT switch w/terminal strip (N/A with back connection on 1130) (N/A on 1133)								
V7 - 2-SPDT switch w/DIN plug (N/A with back connection on 1130)								
V8 - 2-SPDT switch w/terminal strip (N/A with back connection on 1130) (N/A on 1133)								
Range (coding examples only, see range table on page 71 for all standard ranges)								
5# - 5 psi								5#

Distribuidor Autorizado CALFER
CALFER DE MÉXICO®
CONTROLES AUTOMÁTICOS INDUSTRIALES
50 ANIVERSARIO
www.calfer.com.mx 01 800 0125 742 /CalferMx
soporte.tecnico2@calfer.com.mx

ASHCROFT®
Trust the shield.®

FEATURES

- 35 psi static pressure capability
- Superior magnets for smoother pointer motion
- Standard with both In-line and back process ports
- Reed switches (optional) for direct system control

SPECIFICATIONS

Accuracy:	±3% ascending pressure full scale differential (FSD)
Process Connection Location:	Dual, In-line or Back
Differential Pressure Ranges	0.6-1 IWD to 60 IWD
Static Pressure:	35 psi
Migration:	Zero
Maximum Process Temperature:	140°F (60°C)

WETTED COMPONENTS

Model	Actuaor	O-Rings/Diaphragm	Body Material
1134	Convoluted Diaphragm	Buna-N®	Glass filled nylon

Ceramic magnet & SS spring are also wetted components

NON-WETTED COMPONENTS

Model	Case Material	Window
1134	SS	Glass

1134
4½″ dial size

ORDERING CODE

Example:	451134	E	D	RQ	M	XBF	10IW
Dial Size/Model Code							
451134 - 4½″ SS case	451134						
Body Material							
E - Glass filled nylon		E					
Case Fill							
D - Dry			D				
Process Connection Size							
RQ - ⅛ NPT Female				RQ			
Process Connection Location							
M - Dual In-Line or back					M		
Options (if choosing an option(s) must include a “X”)						X__	
VD - Viton® O-rings & diaphragm							
EM - EPDM O-rings & diaphragm (451134 only on ranges up to 4IW)							
PD - Plastic window							
BF - Surface mount						BF	
C4 - Individual certified calibration chart							
CS - Dual scale							
TM - Pipe mounting bracket							
V1 - 1-SPST switch with DIN plug (451134 - Adj. 40-80% of range)							
V3 - 2-SPST switch with DIN plug (451134 - Adj. 40-80% of range)							
V5 - 1-SPDT switch with DIN plug (451134 - Adj. 40-80% of range)							
Range (coding examples only, see range table on page 71 for all standard ranges)							
10IW - 10inH_2O							10IW

Distribuidor Autorizado CALFER
CALFER DE MÉXICO®
CONTROLES AUTOMÁTICOS INDUSTRIALES
50 ANIVERSARIO
www.calfer.com.mx 01 800 0125 742 /CalferMx
soporte.tecnico2@calfer.com.mx

ASHCROFT®
Trust the shield.®

FEATURES

- Can be used with electrical contacts
- Available with diaphragm seals and capillaries
- Rugged design

1125A
4½″, 6″ dial sizes

1127
4½″, 6″ dial sizes

SPECIFICATIONS

Accuracy:	±2-1-2% of span (ASME B40.100 Grade 1A)
Process Connection Location:	Lower, Back
Case Style:	Open Front
Movement:	Bronze
Window Material	Glass
Pointer:	Black
Mounting Options:	Stem or Surface

WETTED COMPONENTS

Model	Bourdon Tube	Process Connection	Joints
1125, 1125A	Grade A Phosphor bronze	Bronze	Brazed
1127, 1128	316 SS	316 SS	Welded

NON-WETTED COMPONENTS

Model	Case	Ring
1125, 1125A	Cast aluminum, black epoxy coated	Aluminum, black epoxy coated
1127, 1128	Cast aluminum, black epoxy coated	Aluminum,hinged, black epoxy coated

MIN/MAX TEMPERATURE LIMITS

Version	Ambient	Process	Storage
Dry	-20°F to 200°F (-29°C to 93°C)	-20°F to 250°F (-29°C to 121°C)	-40°F to 250°F (-40°C to 121°C)

ORDERING CODE

Example: 45 1125 – 02 L 100#

Dial Size	
45 - 4½″	45
60 - 6″	
Models	
1125 - Aluminum, open front case	1125
1125A - Aluminum, open front case - dial with “0” at 12 o’clock	
1127 - Aluminum, open front case	
1128 - Aluminum, open front case - dial with “0” at 12 o’clock	
System	
Blank - Grade A phosphor bronze tube/brass process connection (1125 and 1125A only)	
SD - 316 SS tube/316 SS process connection (1127 and 1128 only)	
Process Connection Size	
02 - ¼ NPT Male	02
Process Connection Location	
L - Lower	L
B - Lower back (1125 and 1125A only)	
Range (coding examples only, see range table on page 70 for all standard ranges)	
100# - 100 psid	100#

Distribu
CALFER DE MÉXICO®
CONTROLES AUTOMÁTICOS INDUSTRIALES
50 ANIVERSARIO
www.calfer.com.mx 01 800 0125 742 /CalferMx
soporte.tecnico2@calfer.com.mx

ASHCROFT®
Trust the shield.®

FEATURES

- SS case
- Dry or liquid filled
- Available with diaphragm seals
- Flow measurement dial (optional)
- Ranges from 10 IWD to 1,000 psid (5503)

SPECIFICATIONS

Accuracy:	5503: ±1.6% of span 5509: ±2.5% of span
Process Connection Location:	Lower
Case Style:	304 SS open front case
Window Material	Shatterproof glass
Pointer:	Black painted aluminum
Weather Protection:	5503: IP65 Dry case IP66 Hermetically sealed case or liquid filled 5509/6509: IP54 Dry IP65 Liquid filled or XLJ option
Mounting:	Stem, wall or pipe
Static Pressure:	5503: 1,450 psi (STD.) 3,625 psi for ranges <10 psid or 5,801 psi for ranges >10 psid (OPT.) 5509: 145 psi for ranges from 10 IWD to 3 psi 400 psi for range of 5 psi and above
Approvals:	CRN (5503 only), CE, ATEX (OPT.)

WETTED COMPONENTS

Model	Diaphragm	Housing	Code
5503	150 IW to 10 psid: 316Ti	316 SSL	SS
	15 psid to 40 psid: Duratherm®		
	>40 psid: Inconel®		
	Hastelloy® C276	Hastelloy® C276	HH
	Hastelloy® C276	316 SS	HS
	Monel®: 10 psid and above	316 SS	PS
5509	10 IW to 5 psid: 315Ti	316 SSL (w/Viton® O-ring)	S
	15 psid and above Duratherm® 2.4781 (NiCrCo alloy)		

NON-WETTED COMPONENTS

Model	Case	Ring
5503	304 SS open front case 316 SS optional	Bayonet ring 316 SS optional
5509	304 SS open front	Bayonet

MIN/MAX TEMPERATURE LIMITS

Version	Ambient	Process	Storage
Dry	-4°F to 176°F (-20°C to 80°C)	-4°F to 185°F (-20°C to 85°C)	-40°F to 140°F (-40°C to 60°C)

5503
4˝ (100mm), 6˝ (160mm) dial sizes

5509
4˝ (100mm), 6˝ (160mm) dial sizes

Distribuidor Autorizado CALFER
CALFER DE MÉXICO®
CONTROLES AUTOMÁTICOS INDUSTRIALES
50 ANIVERSARIO
www.calfer.com.mx 01 800 0125 742 /CalferMx
soporte.tecnico2@calfer.com.mx

ASHCROFT®
Trust the shield.®

ORDERING CODE Example:	10	5503	SS	L	02	L	XC4	10IW
Dial Size								
10 - 100mm (4″)	10							
16 - 160mm (6″)								
Model								
5503 - 304 SS open front case		5503						
5509 - 304 SS open front case								
6509 - 304 SS solid front case								
5503 Diaphragm Housing Material								
SS - 316 SS for ranges of 5 psi and below - High strength cobalt alloy (Duratherm 600®) for ranges of 10 psi and above			SS					
HH - Hastelloy® C 276 (Ranges 60 psid and above (NACE compliant))								
PS - Monel® diaphragm and 316 SS housing								
S - 316 SS (5509 diaphragm housing materials)								
Case Fill								
D - Dry								
L - Glycerin fill				L				
Process Connection Size								
02 - ¼ - NPT Male					02			
04 - ½ - NPT Male								
15 - G½B Male; DIN EN837								
25 - ¼ - NPT Female								
50 - ½ - NPT Female								
Process Connection Location								
L - Lower						L		
Options (if choosing an option(s) must include an "X")							X _ _	
CD-5 - Certificate of Conformance to NACE, (5503 only - Hastelloy® C 276 diaphragm and housing required)								
AT - ATEX Listed (5503 only)								
HS - Hastelloy® C 276 diaphragm with 316 SS housing, (5503 only - Only available with 1,450 psi static pressure)								
C3 - Material Certificate to EN 10204 3.1 (5503 only)								
SP - Static pressure to 3,625 psi for ranges <10 psid or 5,801 psi ranges >10 psid, (5503 only)								
AJ - Accuracy 0.5% Upscale (5503 only)								
C4 - Individual calibration chart							C4	
TM - Pipe mounting bracket								
FW - Wall mounting bracket								
YW - 316 SS case and ring								
GV - Silicone fill								
LJ - Hermetically sealed case (IP65)								
43 - 3-Way manifold								
MN - Bonded SS tag								
NH - SS Wired tag								
NN - Paper tag bonded to case								
6B - Cleaned for oxygen service								
DA - Dial marking								
Electric Contacts								
ED - Dual setpoint, high and low contacts (specify magnetic or inductive contacts)								
EE - Dual setpoint, double high contacts (specify magnetic or inductive contacts)								
EF - Dual setpoint, double low contacts (specify magnetic or inductive contacts)								
QH - Single setpoint closed high contact (5509 only - specify magnetic or inductive contacts)								
QL - Single setpoint open low contact (5509 only - specify magnetic or inductive contacts)								
Range (coding examples only, see range table on psge 71 for all standard ranges)								
10IWD - 10 inH_2O								10IW

Distribuidor Autorizado CALFER
CALFER DE MÉXICO®
CONTROLES AUTOMÁTICOS INDUSTRIALES
50 ANIVERSARIO
www.calfer.com.mx 01 800 0125 742 /CalferMx
soporte.tecnico2@calfer.com.mx

Standard Differential Pressure Gauge Ranges

1125 &1127 (210° dial arc) - Single Scale						
psid	kg/cm²	bar	kPa	Duals Scale Outer Scale psi	1125 Static Pressure Limits	1127 Static PressureLimits
10# (130° dial arc)	-	-	-	-	30 psi	45 psi
15# (130° dial arc)	-	-	-	-	30 psi	45 psi
-	-	-	-	-	-	45 psi
20#	1.4KSC	1.4BR	140KP	20#	30 psi	45 psi
-	2KSC	2BR	200KP	28#	-	
30#	-	-	-	-	60 psi	45 psi
-	4KSC	4BR	400KP	55#	-	
60#	-	-	-	-	120 psi	90 psi
100#	7KSC	7BR	700KP	100#	200 psi	130 psi
160#	11KSC	11BR	1100KP	160#	300 psi	208 psi
200#	14KSC	14BR	1400KP	200#	300 psi	260 psi
300#	20KSC	20BR	2000KP	300#	450 psi	390 psi
400#	28KSC	28BR	2800KP	400#	600 psi	520 psi
600#	40KSC	40BR	4000KP	600#	900 psi	780 psi
800#	56KSC	56KSC	5600KP	800#	1200 psi	1040 psi
1000#	70KSC	70BR	7000KP	1000#	1500 psi	1200 psi

1125A &1128 (210° dial arc) Zero Center Dial- Single Scale						
psid	kg/cm²	bar	kPa	Duals Scale Outer Scale psi	1125A Static Pressure Limits	1128 Static Pressure Limits
5/5#	-	-	-	5/5#	30 psi	45 psi
10/10#	0.7/0.7KSC	0.7/0.7BR	70/70KP	10/10#	30 psi	45 psi
15/15#	-	-	-	-	60 psi	45 psi
-	1/1KSC	1/1BR	100/100KP	14/14#	-	
-	2/2KSC	2/2BR	200/200KP	28/28#	-	
30/30#	-	-	-	-	120 psi	90 psi
50/50#	3.5/3.5KSC	3.5/3.5BR	350/350KP	50/50#	200 psi	130 psi
80/80#	5.5/5.5KSC	5.5/5.5BR	550/550KP	80/80#	300 psi	208 psi
100/100#	7/7KSC	7/7BR	700/700KP	100/100#	300 psi	260 psi
150/150#	10/10KSC	10/10BR	1000/1000KP	150/150#	450 psi	390 psi
200/200#	14/14KSC	14/14BR	1,400/1400KP	200/200#	600 psi	520 psi
300/300#	20/20KSC	20/20BR	2000/2000KP	300/300#	900 psi	780 psi
400/400#	28/28KSC	28/28BR	2800/2800KP	400/400#	1200 psi	1040 psi
500/500#	35/35KSC	35/35BR	3500/3500KP	500/500#	1500 psi	1200 psi

Distribuidor Autorizado CALFER
CALFER DE MÉXICO®
CONTROLES AUTOMÁTICOS INDUSTRIALES
50 ANIVERSARIO
www.calfer.com.mx 01 800 0125 742 /CalferMx
soporte.tecnico2@calfer.com.mx

Standard Differential Pressure Gauge Ranges

ASHCROFT®
Trust the shield.®

1130 - Single Scale			
psid	kg/cm²	bar	kPa
-	0.25KSC	0.25BR	25KP
5#	-	-	-
8#	0.5KSC	0.5BR	50KP
10#	0.75KSC	0.75BR	75KP
15#	1KSC	1BR	100KP
20#	-	-	-
25#	1.6KSC	1.6BR	160KP
30#	2KSC	2BR	200KP
-	2.5KSC	2.5BR	250KP
40#	3KSC	3BR	300KP
50#	-	-	-
60#	4KSC	4BR	400KP
-	5KSC	5BR	500KP
80#	-	-	-
-	6KSC	6BR	600KP
100#	7KSC	7BR	700KP
-	9KSC	9BR	900KP
150#	10KSC	10BR	1000KP

1132 - Single Scale					
psid	inH_2O	kg/cm²	bar	mBar	kPa
1#	25IW	0.075KSC	0.075BR	75MB	-
-	100IW	0.25KSC	0.25BR	250MB	25KP
5#	-	-	-	-	-
8#	200IW	0.5KSC	0.5BR	-	50KP
-	-	0.75KSC	0.75BR	-	75KP
15#	400IW	1KSC	1BR	-	100KP
20#	500IW			-	
25#	-	1.6KSC	1.6BR	-	160KP
30#	-	2KSC	2BR	-	200KP
-	-	2.5KSC	2.5BR	-	250KP
40#	-	3KSC	3BR	-	300KP
50#	-	-	-	-	
60#	-	4KSC	4BR	-	400KP

Contact factory for ranges not listed above.

1131 - Single Scale			
psid	kg/cm²	bar	kPa
-	0.25KSC	0.25BR	25KP
5#	-	-	-
7#	0.5KSC	0.5BR	50KP
10#	0.75KSC	0.75BR	75KP
15#	1KSC	1BR	100KP
20#	-	-	-
25#	-	-	-
30#	2KSC	2BR	200KP
-	2.5KSC	2.5BR	250KP
40#	-	-	-
60#	4KSC	4BR	400KP
100#	7KSC	7BR	700KP

1133 - Single Scale	
inH_2O	mmH_2O
1IW	25MW
2IW	50MW
5IW	125MW
10IW	250MW
25IW	600MW

1134 - Single Scale (inH_2O)			
inH_2O	inH_2O	inH_2O	inH_2O
0.6IW	4IW	10IW	30IW
1IW	5IW	15IW	40IW
2IW	6IW	20IW	50IW
3IW	8IW	25IW	60IW

5503 & 5509 - Single Scale				
psid	mBar	bar	IWD	Notes
1#	40	0.6	10	
5#	60	1	15	
10#	100	1.6	30	
15#	160	2.5	60	
30#	250	4	100	
60#	400	6	160	
100#	-	10	200	
160#	-	16	-	
200#	-	25	-	
300#	-	-	-	
400#	-	-	-	
600#	-	-	-	5503 only

Distribuidor Autorizado CALFER
CALFER DE MÉXICO®
CONTROLES AUTOMÁTICOS INDUSTRIALES
50 ANIVERSARIO
www.calfer.com.mx 01 800 0125 742 /CalferMx
soporte.tecnico2@calfer.com.mx

PRESSURE GAUGES

SANITARY GAUGES

1032 Sanitary, 1032 Fractional..... 74-75
1036 Sanitary, 1037 Fitting..... 76-77
2032, 2036 Sanitary 78-79
2132, 2136 Sanitary 78-79
2232, 2236 Sanitary 78-79
1032 Sanitary, Fractional 80
Sanitary, Standard Ranges..... 80

ASHCROFT®
Trust the shield.®

1032 SANITARY FEATURES

- Clean-in-place (CIP) or steam-in-place (SIP)
- Autoclave or sterilize 3½″ dial only with polysulfone window option
- Easy Zero™ provides external adjustability of instrument span (3½″ dial)
- Serialized material certificates
- 12-20 RA microinches wetted surface inches

1032 FRACTIONAL SANITARY FEATURES

- FlutterGuard™ option, reduces movement wear and eliminates pointer flutter
- Serialized identification numbers and material certificates

SPECIFICATIONS

Accuracy:	1032 Sanitary: ±1.5% of span for pressure ranges 100 psi and above, ±2% of span for vacuum, compound and ranges below 100 psi 1032 Fractional: ±3% of span (upscale) ±5% of span (downscale)
Process Connection Size:	1032 Sanitary: 1½″ and 2″ Tri-Clamp® 1032 Fractional Sanitary: ¾″ Tri-Clamp®
Process Connection Location:	1032 Sanitary: Lower or back 1032 Fractional Sanitary: Lower only
Case Style:	Open front
Ring:	1032 Sanitary: Bayonet, removable 1032 Fractional Sanitary: Friction fit
Movement:	1032 Sanitary: 2½″, 3½″ 300 SS, 4½″ dial 400 SS 1032 Fractional Sanitary: 300 SS
Window Material:	1032 Sanitary: 2½″, 3½″ polycarbonate, 4½″ glass 1032 Fractional Sanitary: Glass
Mounting Options	2½″, 3½″, 4½″, with armored capillary
Dampening Options:	1032 Sanitary: ***PLUS!***™ performance or liquid fill 1032 Fractional Sanitary: FlutterGuard™

WETTED COMPONENTS

Models	Diaphragm	Seal Housing	Joints
1032 Sanitary	316L SS electro polished	316L SS	Welded
1032 Fractional	316L SS electro polished	316L SS	Welded

NON-WETTED COMPONENTS

Models	Case	Ring
1032 Sanitary	300 SS electropolished	300 SS electropolished
1032 Fractional	300 SS electropolished	300 SS electropolished

MIN/MAX TEMPERATURE LIMITS

Version	Ambient	Process	Storage
Dry	–20°F to 200°F (–29°C to 93°C)	–20°F to 250°F (–29°C to 121°C)	–40°F to 250°F (–40°C to 121°C)

1032 Sanitary
2½″, 3½″, 4½″ dial sizes

1032 Fractional
2″ (50mm) dial size

A3®
74-03

Distribuidor Autorizado CALFER
CALFER DE MÉXICO®
CONTROLES AUTOMÁTICOS INDUSTRIALES
50 ANIVERSARIO
www.calfer.com.mx 01 800 0125 742 /CalferMx
soporte.tecnico2@calfer.com.mx

ASHCROFT®
Trust the shield.®

ORDERING CODE Example:	201032	S		75	L	XC4	100#
Dial Size/Model							
201032 - 2″	201032						
251032 - 2½″							
351032 - 3½″							
451032 - 4½″							
System							
S - 316L SS tube and process connection		S					
Case Fill							
Blank - Dry gauge							
L - Liquid filled (USP grade glycerin, N/A for Fractional sanitary)							
Process Connection Size							
75 - ¾″ Tri-Clamp®, 2″ dial only				75			
15 - 1½″ Tri-Clamp®, 2½″ and 3½″ dial only							
20 - 2″ Tri-Clamp®, 2½″, 3½″ and 4½″ dial sizes							
Process Connection Location							
L - Lower					L		
B - Back (N/A for 2″ dial fractional sanitary)							
Options (if choosing an option(s) must include an "X")						X _ _	
C4 - Individual calibration chart (in accordance with ASME B 40.100:2013. Accuracy of unit traceable to NIST)						C4	
NH - SS tag wired to case							
NN - Paper tag bonded							
NM - NEOBEE® M-20 system fill, 2½″, 3½″ and 4½″ dial sizes only							
PD - Polycarbonate window, 2″ and 4½″ dial only, standard are 2½″ and 3½″							
SG - Safety glass							
PS - Polysulfone window, Autoclave or Sterilize, 3½″ dial only							
CZ - Food grade silicone system fill, 2½″ and 3½″ only							
LL - ***PLUS!***™ performance, 2½″, 3½″ and 4½″ only							
ZY - FlutterGuard™ (Fractional sanitary only)							
Range (coding examples only, see range table on page 80)							
100# - 100 psi, max. pressure 1,000 psi							100#

Distribuidor Autorizado CALFER
CALFER DE MÉXICO®
CONTROLES AUTOMÁTICOS INDUSTRIALES
50 ANIVERSARIO
www.calfer.com.mx 01 800 0125 742 /CalferMx
soporte.tecnico2@calfer.com.mx

ASHCROFT®
Trust the shield.®

FEATURES

- Clean-in-place (CIP) or steam-in-place (SIP)
- Autoclave or sterilize with polysulfone window option (XPS)
- Retrofits other manufacturer's CPM design
- Easy Zero™ provides external adjustability of instrument span
- 1037, Pipe size: ½″ to 2″ mates with type 1036 Inline Sanitary gauge
- 1037, Tri-Clamp® connections
- 1037, Electropolished 316L SS wetted material,12 to 20RA internal surface finish

SPECIFICATIONS

Accuracy:	±1.5% of span for pressure ranges 100 psi and above ±2.0% of span for vacuum, compound and ranges below 100 psi
Process Connection:	1½″ Tri-Clamp®
Process Connection Location:	Lower
Case Style:	Open front
Movement:	300 SS
Window Material:	Polycarbonate
Pointer:	Black-painted aluminum with external zero adjustment
Mounting Options:	Tri-Clamp®
Dampening Options:	***PLUS!***™ performance and liquid fill

WETTED COMPONENTS

Model	Diaphragm	Seal Housing	Joints
1036	316L SS electopolished	316L SS	Welded
1037	316L SS electopolished	316L SS	Welded

NON-WETTED COMPONENTS

Model	Case	Ring
1036 Sanitary	304 SS	300 SS

MIN/MAX TEMPERATURE LIMITS

Version	Ambient	Process	Storage
Dry	–20°F to 200°F (–29°C to 93°C)	–20°F to 250°F (–29°C to 121°C)	–40°F to 250°F (–40°C to 121°C)

1036
3½″ dial size

1037
Fittings

Distribuidor Autorizado CALFER
CALFER DE MÉXICO®
CONTROLES AUTOMÁTICOS INDUSTRIALES
50 ANIVERSARIO
www.calfer.com.mx 01 800 0125 742 /CalferMx
soporte.tecnico2@calfer.com.mx

ASHCROFT®
Trust the shield.®

ORDERING CODE Example:	351036	S	L	15	L	XC4	100#
Dial Size/Model							
351036 - 3½″	351036						
System							
S -316L - SS tube and process connection		S					
Case Fill							
Blank - Dry gauge							
L - Liquid filled, glycerin			L				
Process Connection Size							
15 - 1½″ Tri-Clamp®				15			
Process Connection Location							
L - Lower					L		
Options (if choosing an option(s) must include an "X")						X _ _	
C4 - Individual calibration chart (in accordance with ASME B 40.100:2013. Accuracy of unit traceable to NIST)						C4	
NH - SS Tag wired to case							
NN - Paper tag bonded							
SG - Safety glass							
PS - Polysulfone Window (Autoclave or Sterilize)							
CZ - Food grade silicone system fill							
LL - ***PLUS!***™ performance							
VD - Viton® O-ring							
EM - EPDM O-ring							
Range (coding examples only, see range table on page 80 for all standard ranges)							
100# - 100-psi							100#

Ordering Code 1037 In-Line Sanitary Pressure Fitting

Pipe Size/Part Number
½″ - 292C139-01
¾″ - 292C139-02
1″ - 292C139-03
1½″ - 292C139-04
2″ - 292C139-05

Distribuidor Autorizado CALFER
CALFER DE MÉXICO®
CONTROLES AUTOMÁTICOS INDUSTRIALES
50 ANIVERSARIO
www.calfer.com.mx 01 800 0125 742 /CalferMx
soporte.tecnico2@calfer.com.mx

ASHCROFT®
Trust the shield.®

FEATURES

- Multi-Functional digital pressure gauge with optional 4-20mA output 1 or 2 SPDT Switches
- Large LCD display
- ±0.25% of span terminal point accuracy
- IP65 Weatherproof case
- Material Traceability Certification to EN 10204: 2004 3.1 (Excludes 2036 Series)

SPECIFICATIONS

Accuracy:	±0.25% of span, terminal point
Process Connection:	¾″ Tri-Clamp® (±0.5% of span accuracy) 1½″ Tri-Clamp® 2″ Tri-Clamp® 1½″ Inline
Process Connection Location:	Lower, top, left or right side
Case Enclosure Rating:	Weatherproof, IP65
Fill Fluid:	Glycerine standard, Food grade silicone (XCZ), Food grade mineral oil (XMY)(4)
Seal Surface Finish:	12-20Ra
Display Type:	Full 5 digital LCD
Backlight:	Optional, (battery Backup required on 213X loop powered)
Bar Graph:	10 Segment
Battery Life:	450 hrs., Battery life indicator (STD.)
Configuration Mode:	Allows for changes to default settings of gauge Including password, zero disable, recalibration, restore factory defaults
Switch Setpoint	Program and switch setpoints
Update Rate	100 ms, 200 ms, 500 ms, 1 sec
Dampening	None, average, 2, 4, 6, 8 times per 100ms

WETTED COMPONENTS

Model	Diaphragm	Seal Housing	Joints
2030	316L SS electopolished	316L SS	Welded

NON-WETTED COMPONENTS

Model	Case
2030 Sanitary	304 SS, Electro Polished/Tumbled

MIN/MAX TEMPERATURE LIMITS

Ambient	Process	Storage
14°F to 140°F (–10°C to 60°C)	14°F to 275°F (–10°C to 135°C)	–4°F to 158°F (–20°C to 70°C)

AGENCY APPROVALS

3A Sanitary
Material Traceability Certification to EN 10204: 2004 3.1 standard
ASME B40.7

2030
3″ dial size

3
74-03

Distribuidor Autorizado CALFER
CALFER DE MÉXICO®
CONTROLES AUTOMÁTICOS INDUSTRIALES
50 ANIVERSARIO
www.calfer.com.mx 01 800 0125 742 /CalferMx
soporte.tecnico2@calfer.com.mx

ORDERING CODE Example:	30	2032	S	D	20	L	XBL	1000#
Dial Size								
30 - 3.0″	30							
Model (Accuracy)								
2032 - Battery power		2032						
2132 - 4-20mA loop								
2232 - 12-36 Vdc								
2036 - Battery power (1½″ inline Tri-Clamp® conn. only)								
2136 - 4-20mA Loop (1½″ inline Tri-Clamp® conn. only)								
2236 - 12-36 Vdc (1½″ inline Tri-Clamp® conn. only)								
Standard								
S - 316 SS			S					
Case								
D - Dry				D				
Seal Size Process Connection								
Seal Size (2-32)								
75 - ¾″ Tri-Clamp®								
15 - 1½″ Tri-Clamp®								
20 - 2.0″ Tri-Clamp®					20			
Seal Size (2-36)								
15 - 1½″ Inline								
Process Connection Location								
L - Lower						L		
E - 9 o'clock								
D - 3 o'clock								
T - Top								
Options (if choosing an option(s) must include an "X")							X _ _	
AO - 4-20mA output for line power gauges								
U1 - (1)SPDT Switch (line power gauges only, shielded cable standard with 3″ case)								
U2 - (2)SPDT Switch (line power gauges only, shielded cable standard with 3″ case)								
BL - Backlight							BL	
BK - Battery back-up								
JZ - Custom cable length								
PP - Protective front cover								
RE - Remote mount seal & sensor (3′ shielded cable standard)								
CK - Silicone fill fluid								
CZ - Food grade silicone								
MY - Food grade mineral oil (required for compound and vacuum ranges)								
6B - Cleaned for oygen service								
CD-1 - Certificate of conformance to specs and/or drawings								
C4 - Individual certified calibration chart								
FF - Flange for panel mounting								
NH - Metal tag wired to case								
NN - Paper tag bonded to case								
MF - Free from mercury certificate								
HN - Mini Hirschmann® connector								
MN - Mylar® tag bonded to case								
Pressure Range								
Compound								
15#&V - Vac. to 15 psi								
30#&V - Vac. to 30 psi								
Gauge								
5# - 0-5 psi								
10# - 0-10 psi								
15# - 0-15 psi								
30# - 0-30 psi								
60# - 0-60 psi								
100# - 0-100 psi								
160# - 0-160 psi								
200# - 0-200 psi								
300# - 0-300 psi								
500# - 0-500 psi								
600# - 0-600 psi								
800# - 0-800 psi								
1000# - 0-1,000 psi								1000#
2000# - 0-2,000 psi								
2500# - 0-2,500 psi								
3000# - 0-3,000 psi								
5000# - 0-5,000 psi								
7000# - 0-7,000 psi								

Distribuidor Autorizado CALFER
CALFER DE MÉXICO®
CONTROLES AUTOMÁTICOS INDUSTRIALES
50 ANIVERSARIO
www.calfer.com.mx 01 800 0125 742 /CalferMx
soporte.tecnico2@calfer.com.mx

1032, 1036 Standard Range Codes - Single Scale

	psi	bar	kPa	kg/cm²	Dual Scale psi Outer Scale
Vacuum	30IMV	N1BR	100KP	N1KSC	30IMV
Compound	30IMV&15#		-	-	-
	-	N1/1.5BR	N100/150KP	N1/1.5KSC	30IMV/20#
	30IMV&30#		-	-	-
	-	N1/3BR	N100/300KP	N1/3KSC	30IMV/40#
	30IMV&60#		-	-	-
		N1/5BR	N100/500KP	N1/5KSC	30IMV/70#
	30IMV&100#		-	-	-
	-	N1/9BR	N100/900KP	N1/9KSC	30IMV/125#
Positive Pressure	15#	1BR	100KP	1KSC	14#
	-	1.6BR	160KP	1.6KSC	22#
	30#	-	-	-	-
	-	2.5BR	250KP	2.5KSC	35#
	60#	4BR	400KP	4KSC	55#
	-	6BR	600KP	6KSC	85#
	100#	-	-	-	-
	-	10BR	1000KP	10KSC	140#
	160#	-	-	-	-
	200#	-	-	-	-
	-	16BR	1600KP	16KSC	220#
	300#	-	-	-	-
	-	25BR	2500KP	25KSC	350#
	400#	-	-	-	-
	600#	40BR	4000KP	40KSC	550#
	-	60BR	6000KP	60KSC	850#
	1000#(1)	-	-	-	-

(1) Requires high pressure clamp

1032 Fractional Standard Ranges Code - Single Scale

	psi	bar	kPa	Mpa	kg/cm²
Compound	30IMV&30#	-	-	-	-
	30IMV&45#				
	30IMV&60#	-	-	-	-
	30IMV&100#	-	-	-	-
	30IMV&150#	-	-	-	-
	30IMV&300#	-	-	-	-
Positive Pressure	30#	-	-	-	-
	60#	-	-	-	-
	100#	-	-	-	-
	160#	-	-	-	-
	200#	-	-	-	-
	300#	-	-	-	-
	400#	-	-	-	-
	600#				

Other ranges on application

PRESSURE GAUGES

TEST GAUGES

A4A..... 82-83
1082 84
1084 85
Pressure Gauge Information 86

ASHCROFT®
Trust the shield.®

FEATURES

- ±0.1% of span accuracy (ASME B 40.100 Grade 4A)
- Ranges from vacuum to 100,000 psi, gauge, absolute and compound pressure
- Mirror band dial and knife edge pointer to eliminate parallax error
- Solid front protective case

SPECIFICATIONS

Accuracy:	±0.1% of span (ASME B40.100 Grade 4A) (includes NIST Traceable Calibration Certification)
Case Size:	6″, 8 ½″, 12″ or 16″
Enclosure Rating:	Case is not sealed, recommended for weather protected environment only
Process Connection Size:	¼ NPT Female bottom ⅛ NPT Male or female – back or bottom ¼ NPT Male or female – back or bottom 9⁄16″-18 UNF-2B Female for ¼″ HP tubing MS33649-4 Female only – back or bottom MS33656-4 Male only – back or bottom MS-16142 Female only – back or bottom Mil-G-18997D Male only – back or bottom
Pointer Travel	350 Degrees up to 30,000 psi 300 Degrees 40,000 to 50,000 psi 270 Degrees 60,000 thru 100,000 psi
Options:	Temperature compensation from –25°F to +125°F

WETTED COMPONENTS

Model	Inlet Fitting	Bourdon Tube
A4A	303 SS	0/15 psi through 0/40 psi: Beryllium copper 0/50 psi through 0/100,000 psi: 403 SS

NON-WETTED COMPONENTS

Model	Case Material	Enclosure Rating
A4A	Cast aluminum, solid front, blow out rear cover; Integral panel mounting flange	Case is not sealed, recommended for weather protected environment only

A4A
6″, 8½″, 12″, 16″ dial sizes

Distribuidor Autorizado CALFER
CALFER DE MÉXICO®
CONTROLES AUTOMÁTICOS INDUSTRIALES
50 ANIVERSARIO
www.calfer.com.mx 01 800 0125 742 /CalferMx
soporte.tecnico2@calfer.com.mx

ASHCROFT®
Trust the shield.®

ORDERING CODE Example:	A4A	L	G	V	50000	XC
Model Code/Dial Size						
A4A - D-6″ dial	A4A					
A4A - E-8½″ dial						
A4A - F-12″ dial						
A4A - G-16″ dial						
Process Connection Size						
A - ⅛ NPT Male back						
B - ¼ NPT Male back						
C - ⅛ NPT Female back						
D - ¼ NPT Female back						
E - 9/16-18 Thread back						
F - MS-33656-4 Male back						
G - MS-33649-4 Female back						
H - ¾-16 Thread Male back						
J - 9/16-18 UNF3A Male back						
K - ⅛ NPT Male bottom						
L - ¼ NPT Male bottom		L				
M - ⅛ NPT Female bottom						
N - ¼ NPT Female bottom						
P - 9/16-18 Thread bottom						
R - MS-33656-4 Male bottom						
S - MS-33649-4 Female bottom						
T - ¼-16 Thread Male bottom						
U - 9/16-18 UNF3A Male bottom						
X - MS-16142 9/16-18 Female bottom						
Z - MS-16142 9/16-18 Female back						
Pressure Type						
G - Gauge			G			
A - Absolute						
V - Vacuum						
C - Compound						
Tube Material						
J - Berillium copper (up to 40 psi)						
V - 403 SS (50 psi and greater)				V		
Pressure Range in psi						
15						
20						
25						
30						
40						
50						
60						
75						
100						
150						
200						
250						
300						
400						
500						
600						
750						
1000						
1500						
2000						
2500						
3000						
4000						
5000						
6000						
7500						
10000						
15000						
20000						
25000						
30000						
40000						
50000					50000	
60000 (available in 8½″, 12″ and 16″)						
75000 (available in 8½″, 12″ and 16″)						
100000 (available in 8½″, 12″ and 16″)						
Optional Features (if choosing an option(s) must include an “X”)						X _
C - Slotted link						C
D - Temperature compensated						
E - Special calibration						
F - Special scale						
G - Dual scale						
H - Special cleaning for oxygen service						
I - 6″ Peak load indicator						
J - 8½″ Peak load indicator						
K - 12″ Peak load indicator						
L - 16″ Peak load indicator						
M - 6″ Wall mount						
N - 8½″, 12″, 16″ Wall mount						
W - Special cleaning, oxygen clean, do not apply warning labels						

Distribuidor Autorizado CALFER
CALFER DE MÉXICO®
CONTROLES AUTOMÁTICOS INDUSTRIALES
50 ANIVERSARIO
www.calfer.com.mx 01 800 0125 742 /CalferMx
soporte.tecnico2@calfer.com.mx

ASHCROFT®
Trust the shield.®

FEATURES

- ±0.25% of span (ASME B40.1 Grade 3A)
- Solid front safety case

GOLD Service

SPECIFICATIONS

Accuracy:	±0.25% of span (ASME B40.100 Grade 3A)
Process Connection:	¼ NPT or ½ NPT
Connection Location:	Lower or back
Case Style:	Solid front
Movement:	400 Series SS rotary design, Teflon® S coated bearings, micrometer span adjustment, bimetallic temp. compensator (0.005%/per °F max. temperature error)
Window Material:	Glass
Pointer:	Black-painted aluminum with red-painted, knife-edge tip
Mounting Options:	Lower or back

WETTED COMPONENTS

Model	Bourdon Tube	Process Connection Materials	Joints
1082	Bronze	Brass	Silver Brazed
	Monel®	Monel®	Welded

NON-WETTED COMPONENTS

Model	Case	Ring
1082	Aluminum, solid front,black epoxy coated	Hinged steel, black wrinkle finish

MIN/MAX TEMPERATURE LIMITS

Version	Ambient	Process	Storage
Dry	–20°F to 200°F (–29°C to 93°C)	–20°F to 250°F (–29°C to 121°C)	–40°F to 250°F (–40°C to 121°C)

1082
4½″, 6″, 8½″ dial sizes

ORDERING CODE

	Example:	45	1082	P	S	02	L	100#
Dial Size								
45 - 4½″ dial		45						
60 - 6″ dial								
85 - 8½″ dial								
Model								
1082 - Test gauge			1082					
System (tube and process connection)								
A - Bronze tube and brass socket								
P - Monel® tube and socket				P				
Case Style								
S - Solid front					S			
Process Connection Size								
02 - ¼ NPT Male						02		
04 - ½ NPT Male								
Connection Location								
L - Lower							L	
B - Back								
Ranges								
15# - 0-15 psi								
30# - 0-30 psi								
60# - 0-60 psi								
100# - 0-100 psi								100#
160# - 0-160 psi								
200# - 0-200 psi								
300# - 0-300 psi								
400# - 0-400 psi								
600# - 0-600 psi								
1000# - 0-1,000 psi								

Distribuidor
CALFER DE MÉXICO®
CONTROLES AUTOMÁTICOS INDUSTRIALES
50 ANIVERSARIO
www.calfer.com.mx 01 800 0125 742 /CalferMx
soporte.tecnico2@calfer.com.mx

1084 Test Gauge

ASHCROFT®
Trust the shield.®

FEATURES

- MicroSpan™ adjustment eases span calibration
- Integral span adjustment
- Compact design
- Teflon®-coated, SS movement

1084
3″ dial size

1084
Carry bag is included

SPECIFICATIONS

Accuracy:	±0.5% of span (ASME B40.100 Grade 2A)
Process Connection Size:	¼ NPT
Process Connection Location:	Lower
Case Style:	SS
Movement:	Precision, SS with Teflon® S coated bearings and pinion
Window Material:	Polycarbonate
Pointer:	Aluminum with red-painted tip
Mounting Options:	Stem

WETTED COMPONENTS

Model	Bourdon Tube	Process Connection Materials	Joints
1084	316 SS	316 SS	Welded

NON-WETTED COMPONENTS

Model	Case	Ring	Dial
1084	316 SS	316 SS	Aluminum

MIN/MAX TEMPERATURE LIMITS

Version	Ambient	Process	Storage
Dry	–20°F to 200°F (–29°C to 93°C)	–20°F to 250°F (–29°C to 121°C)	–40°F to 250°F (–40°C to 121°C)

ORDERING CODE

ORDERING CODE	Example:	30	1084	S	02	L	100#
Gauge Size							
30 - 3″ dial		30					
Model							
1084 - Test gauge			1084				
System (tube and process connection)							
S - 316L SS tube and process connection				S			
Process Connection							
02 - ¼ Male					02		
Connection Location							
L - Lower						L	
Ranges							
15# - 0-15 psi							
30# - 0-30 psi							
60# - 0-60 psi							
100# - 0-100 psi							100#
160# - 0-160 psi							
200# - 0-200 psi							
300# - 0-300 psi							
400# - 0-400 psi							
600# - 0-600 psi							
1000# - 0-1,000 psi							

Distribuidor Autorizado CALFER
CALFER DE MÉXICO®
CONTROLES AUTOMÁTICOS INDUSTRIALES
50 ANIVERSARIO
www.calfer.com.mx 01 800 0125 742 /CalferMx
soporte.tecnico2@calfer.com.mx

ACCURACY:

Accuracy – the conformity of indication to an accepted standard or true value. Accuracy is the difference (error) between the true value and the indication expressed as a percent of the span. It includes the combined effects of method, observer, apparatus and environment. Accuracy error includes hysteresis and repeatability errors but not friction error. It is determined under specific conditions. (Normal position, 73.4°F (23°C), and 29.92 in Hg barometric pressure.)

The following tables define the ASME B40.1* accuracy grades used by Ashcroft products.

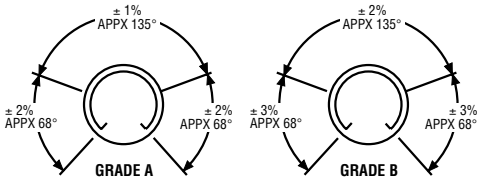

Accuracy of a pressure gauge may be expressed as percent of span or percent of indicated reading. Percent of span is the most common method. Percent of indicated reading is usually limited to precision test gauges and unless specifically spelled out, it may be assumed that an accuracy of ±0.5% means ±0.5% of span.

GRADE 4A:
Gauges offering the highest accuracy and calibrated to ±0.1% of span over the entire range of the gauge. These gauges are called laboratory precision test gauges and are generally 8½″, 12″ or 16″ dials. These high-accuracy gauges may be temperature compensated. They must be handled carefully in order to retain accuracy.

GRADE 3A:
Gauges are calibrated to an accuracy of ±0.25% of span over the entire range of these gauges. These gauges are called test gauges and are generally 4½″, 6″ or 8½″ dials. The gauges are generally not temperature compensated (except Ashcroft Type 1082).

GRADE 2A:
Gauges are calibrated to an accuracy of ±0.5% of span over the entire range of the gauge. They are often referred to as process gauges and are usually supplied as 4½″ and 6″ cases and are not temperature compensated.

GRADE 1A:
Gauges are calibrated to an accuracy of ±1% over the entire range of the gauge. These gauges are high-quality industrial gauges and are supplied in 2½″, 3½″ and 4½″ sizes.

GRADE A:
Gauges are calibrated to an accuracy of ±1% of span over the middle half of the scale and ±2% of span over the first and last quarters of the scale.

GRADE B:
Gauges are calibrated to an accuracy of ±2% of span over the middle half of the scale and ±3% of span over the first and last quarters of the scale. These gauges are often referred to as commercial or utility gauges and are supplied in 1½″, 2″, 2½″, 3½″ and 4½″ case sizes.

GRADE C:
Gauges are calibrated to an accuracy of ±3% of span over the middle half of the scale and ±4% of span over the first and last quarters of the scale.

GRADE D:
Gauges are calibrated to an accuracy of ±5% of span over the entire scale.

ACCURACY EXAMPLES

Range	Accuracy Span	Grade	Permissible Error % of Span
0/100 psi 0/400 kPa 0/1000 bar	100 psi 400 kPa 1000 bar	1A 2A B	1.0 0.5 3 (0/250 & 750/1000 bar) 2 (250/750 bar)
–100/400 30 inHg/ 30 psi	400 kPa 44.7 psi	2A 4A	0.5 0.1

The last item (30 inHg/30 psi)deserves some explanation. The span is defined as the algebraic difference between the limits of the scale. 30 inHg = –14.7 psi Span = 30 psi -(–14.7) = 44.7 psi. 0.1% of 44.7 psi = 0.045 psi or 0.022 Hg.

***ASME B40.1 may be ordered from:**
American Society of Mechanical Engineers
Three Park Avenue, New York, NY 10016

ACCURACY EXAMPLES

Type of Gauge	Grade	Permissible Error % of Span: Lower 25%	Middle 50%	Upper 25%	Max. Friction (% of Span)
Precision Test (A4A)	4A	0.1	0.1	0.1	See Note
Test (1082)	3A	0.25	0.25	0.25	0.25
Process (1279)	2A	0.5	0.5	0.5	0.5
Industrial/ Hydraulic (1009)	1A	1.0	1.0	1.0	1.0
Industrial/ Hydraulic (1010, 1188, 1490)	A	2.0	1.0	2.0	1.0
Commercial/ Utility (1005, 3005, 1008A)	B	3.0	2.0	3.0	2.0

Note: Grade 4A gauges must remain within 0.1% before and after being lightly tapped.

Distribuidor Autorizado CALFER
CALFER DE MÉXICO®
CONTROLES AUTOMÁTICOS INDUSTRIALES
50 ANIVERSARIO
www.calfer.com.mx 01 800 0125 742 /CalferMx
soporte.tecnico2@calfer.com.mx

SWITCHES

PRESSURE & DIFFERENTIAL PRESSURE SWITCHES

A-Series Watertight & Explosion Proof 88-91
B4, B7, D4, D7, H4 Series 92-96
G, L, P Series 97-101
F-Series..... 102-103
DDS Series 104-105
NPI, NPA Series 106-107
Product Selection Information 108-110

ASHCROFT®
Trust the shield.®

FEATURES

- Compact 316 SS construction
- Factory set or field adjustable setpoints
- Expanded selection of pressure and electrical connections
- SIL 3 capable
- Watertight or explosion proof

SPECIFICATIONS

Set Repeatability (Accuracy):	±2% of span (additional setpoint shift ±2% of span per 40°F from initial setpoint setpoint at 70°F typical)
Switch Type:	SPDT or DPDT
Setpoint:	Single setpoint - Factory set or field adjustable
Deadband:	Fixed
Enclosure Ratings:	Watertight: NEMA 6, IP67 Explosion Proof: NEMA 4X, 7,9, IP67
Enclosure Material:	316L SS
Approvals:	Watertight: UL, CSA, CE, CRN, SIL 3 capable, RoHS
	Explosion Proof: UL, CSA, CE, CRN, SIL 3 capable, RoHS, FM, ATEX, IECEx, Dual Seal FACTORY SEALED · FM APPROVED · UL LISTED CLASS I DIV 1 GROUPS A, B, C, & D CLASS II DIV 1 GROUPS E, F, & G T5 or T6 – see Material and Temperature Range Table Sira 13ATEX1123X · IECEx CSA 13.0015X Ex d IIC T6/T5 Gb Ex tb IIIC T85°C/100°C Db T5 or T6 – see Material and Temperature Range Table

A-Series
Watertight Pressure Switch

A-Series
Explosion Proof Pressure Switch

Distribuidor Autorizado CALFER
CALFER DE MÉXICO®
CONTROLES AUTOMÁTICOS INDUSTRIALES
50 ANIVERSARIO
www.calfer.com.mx 01 800 0125 742 /CalferMx
soporte.tecnico2@calfer.com.mx

ASHCROFT®
Trust the shield.®

ORDERING CODE Example:	APA	N4	1	G	012C	V	02	100#	60	R	XNO
Function											
APS - Pressure switch, single setpoint, fixed deadband, factory set, not field adjustable											
APA - Pressure switch, single setpoint, fixed deadband, factory set, field adjustable	APA										
Enclosure											
N4 - Watertight 316 SS body		N4									
N7 - Explosion proof 316 SS											
Micro Switch, First Character											
1 - Single switch, SPDT			1								
2 - Dual switch - DPDT (N4 - not available with "S" actuator < 100 psi, range, N7 - not available with "S" actuator or P&G micro switch)											
Micro Switch, Second Character											
G - Gold contact - 0.1A @ 125 Vac, 0.1A @ 30 Vdc				G							
H - High current - 5A @ 125/250 Vac, 5A @ 28 Vdc resistive, 3A @ 28 Vdc inductive											
L - High current, gold contact - 1A @ 125 Vac, 1A @ 28 Vdc resistive, 0.5A @ 28 Vdc inductive											
P - General purpose - 3A @ 125 Vac, 2A @ 30 Vdc											
Electrical Connection											
000H - Micro DIN connector - Watertight DIN 43650 Form C cable socket without mating connector, not available with DPDT switching, Not available with N7 enclosure											
00MH - Micro DIN connector - Watertight DIN 43650 Form C cable socket with mating connector, not available with DPDT switching, Not available with N7 enclosure											
000N - Nonstandard, customer specified, see # variation, Not available with N7 enclosure											
000T - Spade Terminals, 4 - 0.187″ Male spade - not available with DPDT switching, Not available with N7 enclosure											
___C - ½ NPT Male conduit with 18 AWG wires (Note ___ e.g. 012C = 12″ lead wires, Specify wire length in inches)					012C						
___L - Wire leads, 3-18 AWG PVC insulated wires (Note ___ e.g. 012L = 12″ lead wires, Specify wire length in inches), Not available with N7 enclosure											
___G - M20 X 1.5 Male conduit connection with 18 AWG wires (Note ___ e.g. 012G = 12″ lead wires, Specify wire length in inches)											
___K - M20 X 1.5 Male conduit connection with 4 conductor jacketed cable with 18 AWG wires (Note ___ e.g. 012K = 12″ lead wires, Specify wire length in inches), not available with DPDT switching, Not available with N7 enclosure											
___J - ½ NPT Male conduit connection with 4 conductor jacketed cable with 18 AWG wires (Note ___ e.g. 012J = 12″ lead wires, Specify wire length in inches), not available with DPDT switching, Not available with N7 enclosure											
Actuator Seal											
B - 316 SS piston & Buna-N® O-ring, ranges ≥ 100 psi											
V - 316 SS piston & Viton® O-ring, ranges ≥ 100 psi						V					
S - 316 SS welded diaphragm, ranges ≤ 200 psi											
N - 316 SS piston & HNBR O-ring, ranges ≥ 100 psi											
Process Connection											
01 - ⅛ NPT Male											
02 - ¼ NPT Male							02				
03 - ⅛ NPT Female (not available for B, V, N actuators)											
04 - ½ NPT Male											
05 - 7/16-20 SAE Male											
06 - VCR fixed (not available for B, V, N actuators)											
07 - VCO fixed (not available for B, V, N actuators)											
08 - 7/16-20 SAE Female											
12 - G ¼ A (Type E Stud End)											
13 - G ¼ B											
25 - ¼ NPT Female (not available for B, V, N actuators)											
50 - ½ NPT Female											
46 - 9/16-SAE Female											
76 - 7/16-20 SAE w/37° flare end											
75 - ¾ Tri-Clamp® connection (includes 3A approval), range ≤ 500 psi											
15 - 1½ Tri-Clamp® connection (includes 3A approval), range ≤ 500 psi											
20 - 2.0 Tri-Clamp® connection (includes 3A approval), range ≤ 500 psi											
Ranges (select from tables on page 90-91 for additional ranges)											
100# - 100 psi								100#			
Setpoint											
60 - 5 Characters maximum representing setpoint of the switch in the same units as the ranges of the switch. For setpoints in vacuum specify as "-" pressure. If no set point is required on an APA switch use either "NSR" or NSD". If direction is not known use "NSR" as default									60		
Setpoint Direction											
R - Rising pressure (increasing pressure, decreasing vacuum)										R	
D - Decreasing pressure (decreasing pressure, increasing vacuum)											
Options (select from table on page 91 (If choosing an option(s) must include an "X")											X__
NO - 2 wire leads w/ground wire – wired for normally open operation											NO

Distrib
CALFER DE MÉXICO®
CONTROLES AUTOMÁTICOS INDUSTRIALES
50 ANIVERSARIO
www.calfer.com.mx 01 800 0125 742 /CalferMx
soporte.tecnico2@calfer.com.mx

EXPLOSION PROOF

MATERIAL AND TEMPERATURE RATINGS (based on mat'l and switch code)

SWITCH CODE	MATERIAL CODE	MATERIAL	TEMP. MIN	T5 Ta MAX	T5 Tp MAX	T6 Ta MAX	T6 Tp MAX
1H, 2H, 1L, 2L	S	316 SS	-40°F (-40°C)	192°F (89°C)	192°F (89°C)	165°F (74°C)	165°F (74°C)
1H, 2H, 1L, 2L	B (Ranges 500-7500 psi)	316 SS, Buna-N®	-40°F (-40°C)	192°F (89°C)	192°F (89°C)	165°F (74°C)	165°F (74°C)
1H, 2H, 1L, 2L	B (Ranges 100, 200, 10,000, 15,000 psi)	316 SS, Buna-N®	-4°F (-20°C)	192°F (89°C)	192°F (89°C)	165°F (74°C)	165°F (74°C)
1H, 2H, 1L, 2L	V	316 SS, Viton®	-4°F (-20°C)	192°F (89°C)	192°F (89°C)	165°F (74°C)	165°F (74°C)
1H, 2H, 1L, 2L	N (Ranges 500-7500 psi)	316 SS, HNBR	-40°F (-40°C)	192°F (89°C)	192°F (89°C)	165°F (74°C)	165°F (74°C)
1H, 2H, 1L, 2L	N (Ranges 10,000, 15,000 psi)	316 SS, HNBR	-4°F (-20°C)	192°F (89°C)	192°F (89°C)	165°F (74°C)	165°F (74°C)
1P, 1G	S	316 SS	-4°F (-20°C)	165°F (74°C)	165°F (74°C)	165°F (74°C)	165°F (74°C)
1P, 1G	B	316 SS, Buna-N®	-4°F (-20°C)	165°F (74°C)	165°F (74°C)	165°F (74°C)	165°F (74°C)
1P, 1G	V	316 SS, Viton®	-4°F (-20°C)	165°F (74°C)	165°F (74°C)	165°F (74°C)	165°F (74°C)
1P, 1G	N	316 SS, HNBR	-4°F (-20°C)	165°F (74°C)	165°F (74°C)	165°F (74°C)	165°F (74°C)
All	N	316 SS, HNBR	-4°F (-20°C)	192°F (89°C)	192°F (89°C)	165°F (74°C)	165°F (74°C)

WATERTIGHT

MATERIAL & TEMPERATURE

ACTUATOR SEAL	MATERIAL	TEMPERATURE RANGE
S	316 SS	–40°F to 212°F (–40°C to 100°C)
B (Ranges 100#, 200 psi)	316 SS, Buna-N®	–4°F to 212°F (–20°C to 100°C)
B (Ranges 500# to 15000 psi)	316 SS, Buna-N®	–40°F to 212°F (–40°C to 100°C)
V	316 SS, Viton®	–4°F to 212°F (–20°C to 100°C)
N	316 SS, HNBR	–4°F to 212°F (–20°C to 100°C)

Distribuidor Autorizado CALFER
CALFER DE MÉXICO®
CONTROLES AUTOMÁTICOS INDUSTRIALES
50 ANIVERSARIO
www.calfer.com.mx 01 800 0125 742 /CalferMx
soporte.tecnico2@calfer.com.mx

PRESSURE RATINGS

CONFIGURATION		MAX. WORKING PRESSURE "MWP"			PROOF PRESSURE "PROOF"			BURST PRESSURE		
RANGES (psi)	w/SEAL	psi	bar, kg/cm²	kPa	psi	bar, kg/cm²	kPa	psi	bar, kg/cm²	kPa
up to 200	S	800	55	5,500	1,000	70	7,000	>9,500	>655	>65,500
100-200	B, V or N	2,000	140	14,000	2,000	140	14,000	>10,000	>700	>70,000
500-2,000	B, V or N	5,000	350	35,000	8,000	550	55,000	>30,000	>2,100	>210,000
5,000-7,500	B, V or N	10,000	700	70,000	15,000	1,000	10,000	>50,000	>3,500	>350,000
10,000-15,000	B, V or N	15,000	1,000	100,000	20,000	1,400	140,000	>45,000	>31,000	>310,000

A SERIES SWITCH PERFORMANCE CHARACTERISTICS

	RANGE (Ordering Code)			SETPOINT REPEATABILITY			SETPOINT ADJUSTABILITY			DEADBAND (DB)		
	psi (#)	bar, kg/cm² (BAR) (KSC)	kPa (KP)	psi	bar, kg/cm²	kPa	psi	bar, kg/cm²	kPa	psi	bar, kg/cm²	kPa
DIAPHRAGM	–15/15	–1/1	–100/100	±0.6	±0.4	±4	–15/15	–1/1	–100/100	1-5	0.07-.35	7-35
	30	2	200	±0.6	±0.4	±4	6-30	0.4-2	6-200	1-5	0.07-.35	7-35
	60	4	400	±1.2	±0.8	±8	8-60	0.6-4	60-400	2-10	0.14-.70	14-70
	100	7	700	±2	±0.14	±14	10-100	0.7-7	70-700	3-15	0.2-1.0	20-100
	200	14	1400	±4	±0.28	±28	20-200	1.4-14	140-1,400	3-30	0.2-2.0	20-200
PISTON	100	7	700	±2	±0.14	±14	20-100	1.4-7	140-700	3-15	0.2-1.0	20-100
	200	14	400	±4	±0.28	±28	40-200	2.8-14	280-1,400	3-30	0.2-2.0	20-200
	500	35	3500	±10	±0.70	±70	50-500	3.5-35	350-3,500	20-100	1.4-7.0	140-700
	1000	70	7000	±20	±1.40	±140	100-1,000	7-70	700-7,000	25-150	1.7-10	170-1,000
	2000	140	14000	±40	±2.8	±280	200-2,000	14-140	1,400-14,000	30-300	2-20	200-2,000
	5000	350	35000	±100	±7.0	±700	500-5,000	35-350	3,500-35,000	75-750	5-50	50-5,000
	7500	500	50000	±150	±10	±1,000	750-7,500	50-500	5,000-50,000	110-1,100	7.5-75	750-7,500
	10000	700	70000	±200	±14.0	±1,400	100-10,000	70-700	7,000-70,000	250-2,500	17-170	1,700-1,700
	15000	1000	10000	±300	±20	±2,000	1,500-15,000	100-1,000	10,000-100,000	300-3,000	20-200	200-20,000

OPTIONS

Code	Description
C4	Individual certified calibration chart
FP	Fungus proofing
MQ	Positive Material Identification (75, 15 & 20 process conn. only)
NC	2 wire leads w/ground wire – wired for normally closed operation
NO	2 wire leads w/ground wire – wired for normally open operation
NH	SS tag
NN	Paper tag
6B	Cleaned for oxygen service
GO	No ground wire

Distribuidor Autorizado CALFER
CALFER DE MÉXICO®
CONTROLES AUTOMÁTICOS INDUSTRIALES
50 ANIVERSARIO
www.calfer.com.mx 01 800 0125 742 /CalferMx
soporte.tecnico2@calfer.com.mx

ASHCROFT®
Trust the shield.®

FEATURES

- Setpoint adjustable from 15-100% of range
- Fixed or limited adjustable deadband
- SIL 3 capable
- Explosion proof enclosure available

GOLD Service

SPECIFICATIONS

Set Repeatability (Accuracy):	±1% of span (Additional setpoint shift of ±1% of range per 50°F from initial setpoint set at 70°F typical)
Switch Type:	SPDT or DPDT
Setpoint:	Single setpoint - Factory set or field adjustable
Deadband:	Fixed or limited adjustable deadband
Enclosure Ratings:	B4/D4 - NEMA 4X, IP66 B7/D7 - NEMA 7/9, IP66
Enclosure Material:	Watertight: epoxy coated aluminum Explosion: epoxy coated aluminum or 316 SS
Approvals:	Watertight: UL, CSA, FM, CE, SIL 3 capable, CRN
	Explosion Proof: Standard: FM, UL, CE, CRN Optional: ATEX, CSA, IECEx SIL 3 capable FACTORY SEALED LISTED CLASS I DIV 1 GROUPS B, C, & D CLASS II DIV 1 GROUPS E, F, & G Sira 02ATEX1391X IECEx CSA 14.0077X II 2GD Ex d IIC T6 Gb Ex tb IIIC T85°C Db Ta = -20°C to +60°C

WETTED COMPONENTS

Actuator Seal:	Buna-N®, Teflon®, Viton®, 316L SS, or Monel®	
Process Connection: ¼ NPT Female (standard)	**Pressure Switches** 316 SS or Monel® for psi ranges Epoxy coated carbon steel or 316 SS for IW ranges	**Differential Switches** Nickel plated brass or 316 SS for psid ranges Epoxy coated carbon steel or 316 SS for IWD ranges

D7 Differential Pressure Switch
Explosion-Proof Enclosure

B4 Pressure Switch
Watertight Enclosure

B7 Pressure Switch
316 SS Explosion-Proof Enclosure

D4 Differential H_2O Pressure Switch
Watertight Enclosure

D7 Differential H_2O Pressure Switch
Explosion-Proof Enclosure

H4 Hydraulic Pressure Switch
Watertight Enclosure

CRN REGISTERED
RoHS COMPLIANT

ORDERING CODE Example:	B4	20	B	XPK	600#
Enclosure					
B4 - Pressure switch, watertight enclosure meets NEMA 3, 4, 4X, 13 and IP66 requirements	B4				
B7 - Pressure switch, explosion-proof enclosure Standard housing epoxy coated aluminum. Use variation code XYW for 316 SS housing					
D4 - Differential pressure switch, water-tight enclosure meets NEMA 3, 4, 4X, 13 and IP66 requirements					
D7 - Differential pressure switch, explosion-proof enclosure Standard housing epoxy coated aluminum. Use variation code XYW for 316 SS housing					
Switch Element Selection - UL/CSA Listed SPDT					
20 - Narrow deadband ac, 15A - 125/250 Vac. Estimated dc rating, 0.4A, 120 Vdc (not UL listed)		20			
21 - Ammonia service, 5A - 125/250 Vac					
22 - Hermetically sealed, narrow deadband, 5A - 125/250 Vac. Estimated dc rating, 2.5A, 28 Vdc (not UL listed).					
23 - Heavy duty ac, 22A - 125/250 Vac					
24 - General purpose, 15A - 125/250/480 Vac, ½ A - 125 Vdc, ¼ A - 250 Vdc; 6A, 30 Vdc. (Standard switch)					
25 - Heavy duty dc, 10A - 125 Vac or dc, ⅛ HP - 125 Vac or dc. Not available with psid ranges					
26 - Sealed environment proof, 15A - 125/250 Vac. Estimated dc rating, 0.4A, 120 Vdc (not UL listed)					
27 - High temperature 300°F, 15A - 125/250 Vac					
28 - Manual reset trip on increasing 15A - 125/250 Vac. Not available with N7 enclosure					
29 - Manual reset trip on decreasing 15A - 125/250 Vac. Not available with N7 enclosure					
31 - Low level (gold) contacts, 1A - 125 Vac					
32 - Hermetically sealed, general purpose, 11A - 125/250 Vac, 5A - 30 Vdc					
42 - Hermetically sealed, gold contacts, 1A - 125 Vac					
50 - Variable deadband, 15A - 125/250 Vac					
Switch Element Selection - UL/CSA Listed Dual (2 SPDT)					
61 - Dual narrow deadband, 15A - 125/250 Vac. Estimated dc rating, 0.4A, 120 Vdc (not UL listed)					
62 - Dual sealed environment proof, 15A - 125/250 Vac. Estimated dc rating, 0.4A, 120 Vdc (not UL listed)					
63 - Dual high temperature 300°F, 15A - 125/250 Vac					
64 - Dual general purpose, 15A - 125/250/480 Vac, ½A- 125 Vdc, ¼A - 250 Vdc					
65 - Dual ammonia service, 5A - 125/250 Vac					
67 - Dual hermetically sealed, narrow deadband, 5A - 125/250 Vac. Wires cannot be terminated inside B4 switch enclosure. Estimated dc. rating, 2.5A, 28 Vdc (not UL listed)					
68 - Dual hermetically sealed, general purpose, 11A - 125/250 Vac 5A, 30 Vdc. Wires cannot be terminated inside B400 switch enclosure					
70 - Dual low level gold contacts, 1A - 125 Vac					
71 - Dual hermetically sealed, gold contacts, 1A - 125 Vac. Wires cannot be terminated inside B4 switch enclosure.					
Actuator Seal					

	Temperature Limits.		Pressure Range	
Material	Ambient	Process		
B - Buna-N®	-20°F to 150°F	0°F to 150°F		B
V - Viton®	-20°F to 150°F	20°F to 300°F		
T - Teflon®	-20°F to 150°F	0°F to 150°F		
S - 316L SS	-20°F to 150°F	0°F to 300°F	Not available in vacuum, & inches of water ranges or pressures above 1,000 psi	
P - Monel®	-20°F to 150°F	0°F to 300°F	Not available in vacuum, & inches of water ranges or pressures above 1,000 psi	

Options (use table from page 96 (If choosing an option(s) must include an "X")	X _ _	
PK - Pilot light(s) top mounted	PK	
Range (select from tables on page 95 for additional ranges)		
600# - 600 psi		600#

ORDERING CODE Example:	H4	24	V	XPK	3000#
Enclosure					
H4 - Hydraulic pressure switch, watertight enclosure meets NEMA 3, 4, 4X, 13 and IP66 requirements (Not CE or RoHS compliant)	H4				
Single Switch Element Selection					
20 - Narrow deadband ac, 15A - 125/250 Vac. Estimated dc rating, 0.4A, 120 Vdc (not UL listed)					
22 - Hermetically sealed, narrow deadband, 5A - 125/250 Vac. Estimated dc. rating, 2.5A, 28 Vdc (not UL listed)					
23 - Heavy duty ac, 22A - 125/250 Vac					
24 - General purpose, 15A - 125/250/480 Vac, ½A - 125 Vdc, ¼A - 250 Vdc; 6A, 30 Vdc. (Standard switch)		24			
25 - Heavy duty dc, 10A - 125 Vac or dc, ⅛ HP - 125 Vac or dc. Not available with psid ranges.					
26 - Sealed environment proof, 15A - 125/250 Vac. Estimated dc rating, 0.4A, 120 Vdc (not UL listed).					
27 - High temperature 300°F, 15A - 125/250 Vac					
28 - Manual reset trip on increasing 15A - 125/250 Vac. Not available with N7 enclosure.					
29 - Manual reset trip on decreasing, 15A - 125/250 Vac. Not available with N7 enclosure.					
32 - Hermetically sealed switch, general purpose, 11A - 125/250 Vac, 5A - 30 Vdc					
Dual Switch Element Selection					
61 - Dual narrow deadband, 15A - 125/250 Vac. Estimated dc rating, 0.4A, 120 Vdc (not UL listed)					
62 - Dual sealed environment proof, 15A - 125/250 Vac. Estimated dc rating, 0.4A, 120 Vdc (not UL listed)					
63 - Dual high temp. 300°F, 15A - 125/250 Vac					
64 - Dual general purpose, 15A - 125/250/480 Vac, ½A- 125 Vdc, ¼A - 250 Vdc					
65 - Dual ammonia service, 5A - 125/250 Vac					
70 - Dual low level gold contacts, 1A - 125 Vac					
Actuator Seal					
Material: Process Temp. Limits: Ambient operating temperature limits –20°F to 150°F, all styles, setpoint shift of ±1% of range per 50°F temperature change is normal. Switches are calibrated at 70°F reference					
V - Viton® : 20°F to 300°F : Viton® O-ring, stainless steel pressure connection			V		
Options (use table from page 96 (If choosing an option(s) must include an "X")				X _ _	
PK - Pilot light(s) top mounted				PK	

Range

Range psi	Adjustable Setpoint Limits psi	Proof Pressure psi			
1000	150-1,000	12,000			
2000	300-2,000	12,000			
3000	450-3,000	12,000			3000#
5000	750-5,000	10,000			
7500	1,125-7,500	10,000			

PRESSURE, DIFFERENTIAL PRESSURE RANGES

TABLE 1 - PRESSURE/VACUUM RANGES					Approximate Deadband Switch Element for Buna-N® Diaphragm				
Nominal Pressure			Overpressure Ratings		See multiplier TABLE 3 for additional material & Dual Switch multipliers				
			Proof psi	Burst psi	20, 26, 27	21, 24, 31	50	22	32, 42
Vacuum									
30IMV	–760mm Hg	-100 kPa	250	400	0.3-0.7	1.5-3.0	0.5-2.2	0.4-1.5	2.1-4.2
Compound									
15IWV/15IW	–375mm H_2O/ 375mm H_2O	–3.7 kPa/ 3.7 kPa	20	35	0.15-0.75/0.15-0.75	1.5-2.5/1.5-2.5	0.45-2.0/0.45-2.0	0.5-1.2/0.5-1.2	2.1-3.5/2.1-3.5
30IWV/30IW	–760mm H_2O/ 760mm H_2O	–7.5 kPa/ 7.5 kPa	20	35	0.30-0.60/0.30-0.60	1.5-2.5/1.5-2.5	0.45-2.0/0.45-2.0	0.5-1.5/0.5-1.5	2.1-3.5/ 2.1-3.5
30IMV/15#	–760mm Hg/ 1.0 kg/cm²	–100 kPa/ 100 kPa	250	400	0.5-1.0/0.3-0.7	2.0-3.0/0.3-0.7	0.75-2.5/0.5-1.0	0.7-1.8/0.7-1.4	2.8-4.2/0.7-2.1
30IMV/30#	–760mm Hg/ 1.0 kg/cm²	–100 kPa/ 200 kPa	250	400	1.0-1.5/0.3-0.8	3.0-6.0/0.3-0.8	1.2-4.5/0.7-1.5	1.4-2.4/0.4-1.3	4.2-8.4/1.4-2.8
30 IMV/60#	–760mm Hg/ 4.0 kg/cm²	–100 kPa/ 400 kPa	250	400	2.0-3.0/0.7-1.5	5.0-9.0/3.0-5.0	2.5-7.0/3.0-5.0	2.8-4.5/3.0-5.0	7.0-12.0/4.2-7.0
Pressure									
10IW	250mm H_2O	2.5 kPa	20	35	0.2-0.5	1.0-2.0	0.35-1.5	0.4-1.0	1.4-2.8
30IW	750mm H_2O	7.5 kPa	20	35	0.3-0.6	1.5-2.5	0.45-2.0	0.5-2.0	2.1-3.5
60IW	1,500mm H_2O	15 kPa	20	35	0.5-1.3	1.5-3.5	0.9-2.5	0.7-3.0	2.1-5.0
100IW	2,500mm H_2O	25 kPa	20	35	0.6-1.6	2.5-5.5	1.1-4.0	1.0-4.0	3.5-7.7
150IW	3,750mm H_2O	37 kPa	20	35	1.0-2.5	4.5-8.5	1.7-6.5	2.0-6.0	6.0-12.0
15#	1.0 kg/cm²	100 kPa	500	1,500	0.1-0.35	0.5-1.5	0.2-1.0	0.4-1.0	0.7-2.1
30#	2.0 kg/cm²	200 kPa	500	1,500	0.1-0.50	0.5-1.5	0.3-1.0	0.4-1.0	0.7-2.1
60#	4.0 kg/cm²	400 kPa	500	1,500	0.3-1.0	1.0-3.5	0.7-2.5	0.6-2.0	1.4-5.0
100#	7.0 kg/cm²	700 kPa	1,000	3,000	0.5-1.7	1.5-5.0	1.1-3.5	1.0-4.5	2.1-7.0
200#	14 kg/cm²	1,400 kPa	1,000	3,000	1-3	5-13	2-9	3.0-7.5	7.0-18.2
400#	28 kg/cm²	2,800 kPa	2,400	3,000	4-7.5	5-24	5.5-15	4.0-11.0	7.0-33.6
600#	42 kg/cm²	4,200 kPa	2,400	3,000	4-11	9-30	7-20	5.0-23.0	12.6-42
1000#(1)	70 kg/cm²	7,000 kPa	12,000(1)	18,000	7-30	30-110	18-70	15-80	42-154
3000#	210 kg/cm²	21,000 kPa	12,000	18,000	15-60	80-235	37-160	30.0-230	112-329

(1) Proof pressure is 4,000 psi with stainless steel and Monel® welded diaphragms

TABLE 2 - DIFFERENTIAL PRESSURE RANGES					Approximate Deadband Switch for Element for Buna-N® Diaphragm				
Nominal Pressure			Pressure Ratings		See multiplier TABLE 3 for additional material & Dual Switch multipliers				
			Static Working Pressure	Proof psi	20, 26, 27	21, 24, 31	50	22	32, 42
30IWD	750mm H_2O	7.5 kPa	5.4	21.6	0.3-0.6	1.5-2.5	0.45-2.0	0.5-2.0	2.1-3.5
60IWD	1,500mm H_2O	15 kPa	5.4	21.6	0.5-1.3	1.5-3.5	0.9-2.5	0.7-3.0	2.1-5.0
100IWD	2,500mm H_2O	25 kPa	5.4	21.6	0.6-1.6	2.5-5.5	1.1-4.0	1.0-4.0	3.5-7.7
150IWD	3,750mm H_2O	37 kPa	5.4	21.6	1.0-2.5	4.5-8.5	1.8-6.5	2.0-6.0	6.3-12.0
15#D	1.0 kg/cm²	100 kPa	500	2,000	0.5-1.0	2.0-5.0	0.7-3.5	0.7-1.4	2.8-7.0
30#D	2.0 kg/cm²	200 kPa	500	2,000	1.0-2.0	2.0-5.0	1.5-3.5	1.4-2.8	2.8-7.0
60#D	4.0 kg/cm²	400 kPa	500	2,000	2.0-4.0	3.0-6.0	3.0-4.5	2.8-5.6	4.2-8.5
100#D	7.0 kg/cm²	700 kPa	1,000	4,000	4.0-10.0	11.0-20.0	7.0-15.0	6.0-14.0	16.0-28.0
200#D	14.0 kg/cm²	1,400 kPa	1,000	4,000	5.0-15.0	12.0-40.0	10.0-26.0	7.0-21.0	17.0-56.0
400#D	28.0 kg/cm²	2,800 kPa	1,000	8,000	10.0-20.0	20.0-60.0	15.0-40.0	14.0-28.0	28.0-84.0
600#D	42.0 kg/cm²	4,200 kPa	1,000	8,000	20.0-40.0	80.0-150.0	30.0-115.0	30.0-56.0	12.0-210.0

TABLE 3 - DEADBAND MULTIPLIER TABLE		
Diaphragm Material	Multiply	Notes
Buna-N®	1.0	Multiplier table for additional diaphragm materials
Viton®	1.4	
Teflon®	1.7	
316 SS	1.7	
Monel®	1.7	
Dual Switch	1.6	Additional multiplier when dual switches are selected

Distribuidor Autorizado CALFER
CALFER DE MÉXICO®
CONTROLES AUTOMÁTICOS INDUSTRIALES
50 ANIVERSARIO
www.calfer.com.mx 01 800 0125 742 /CalferMx
soporte.tecnico2@calfer.com.mx

OPTIONAL FEATURES AND ACCESSORIES

		Applicable Switch Seriesz					
		Pressure B4/B7		Differential D4/D7		Hydraulic H4	
Code	**Description**	(psi)	(inH_2O)	(psi)	(inH_2O)		**Notes**
BP	Wall mounting bracket inH_2O		•		•		
CH	Chained cover	•	•	•	•	•	
C8	CSA Approval	•	•	•	•		Standard on N4 Series
CN	ATEX Directive 94/9/EC/IECEx Rating	•	•	•	•		N7 Series only
D2	Dual seal rating (700 Series only)	•			•		
FM	FM Approval – Single element FM Approval – Dual element	•	•	•	•		N/A on all combinations N/A on all combinations
FP	Fungus proofing	•	•	•	•	•	
FS	Factory adjusted setpoint	•	•	•	•	•	Advise static or working pressure for differential pressure switches
G3	Belleville actuator	•					64 or 68 element only. N/A on all combinations
G5	UL Limit control to 150 inH_2O				•		Buna-N® and Viton® diaphragm. N/A on all combinations
G6	UL Limit control to 600 psi	•					Buna-N® and Viton® diaphragm. N/A on all combinations
G7	Secondary chamber with vent	•					SS diaphragm required. Teflon diaphragm is the backup. N7 only
G8	Steam limit control to 300 psi	•					
G9	Fire safe welded acctuator	•					SS diaphragm only
HS	High static differential pressure			•			Buna-N® and Viton® diaphragm – 15 psid & 30 psid only
HX	High pressure, 40 psi, (static) d/p only 160 psi (proof) d/p only 100 psi (proof) pressure only (inH_2O)		•		•		
JK	Left conduit connection	•	•	•	•	•	Standard on N7 Series. N/A with DPDT element on N4 Series
JL	¾″ to ½″ Reducing bushing	•	•	•	•	•	
JM	Metric electrical conduit conn. M20 x 1.5	•	•	•	•	•	
K3	Terminal block (N7 Series only)	•	•	•	•		Terminal blocks standard with N7 dual switches
LE	6 Foot leads on the Micro Switch	•	•	•	•	•	
NH	SS tag	•	•	•	•	•	
NN	Paper tag	•	•	•	•	•	
PK	Pilot light(s) top mounted	•	•	•	•	•	N/A on N7 Series
PM	¾″ Sealed conduit connection w/16″ lead wires	•	•	•	•	•	
TA	316 SS pressure connection		•		•		
TM	2″ Pipe mounting bracket	•	•	•	•		
UD	316 SS pressure conn.			•			
06	Pressure connection: ½ NPT Male, ¼ NPT Female 316 SS (Combination)	•	•	•	•		Standard with 1,000 and 3,000 psi ranges. Bottom connection
07	½ NPT Female press. conn., 316 SS	•	•	•	•		N/A with Monel® diaphragm
6B	Cleaned for oxygen service	•		•			Buna-N® cannot be cleaned for oxygen service
9F	inH_2O housing for outdoor use		•				
YW	316 SS Housing	•	•	•	•		
MD	Metric range on label	•	•	•	•	•	
Y53A	1½″ Sanitary seal with 3A Approval	•					
Y63A	2.0″ Sanitary seal with 3A Approval	•					
PJ	Pilot light 24 Vdc	•	•	•	•	•	N/A on N7 Series

Distribuidor Autorizado CALFER
CALFER DE MÉXICO®
CONTROLES AUTOMÁTICOS INDUSTRIALES
50 ANIVERSARIO
www.calfer.com.mx 01 800 0125 742 /CalferMx
soporte.tecnico2@calfer.com.mx

ASHCROFT®
Trust the shield.®

FEATURES

- Setpoint adjustable from 15-100% of range
- Fixed or adjustable deadband
- Watertight enclosures (L and G-series)
- Explosion proof enclosure (P-series; Dual chamber design)

SPECIFICATIONS

Set Repeatability (Accuracy):	±1% of span (Additional setpoint shift of ±1% of range per 50°F from initial setpoint set at 70°F typical)
Switch Type:	SPDT or 2 SPDT with dual setpoints, or 2 SPDT acting as DPDT (L & G only)
Setpoint:	Single setpoint, fixed deadband Single setpoint, adjustable deadband Dual setpoint, fixed deadband
Deadband:	Fixed or adjustable deadband
Enclosure Ratings:	G Series - NEMA 4X, IP66 L Series - NEMA 4X, IP66 P Series - NEMA 7/9, IP66
Enclosure Material:	G Series - 316L SS L Series - Epoxy coated aluminum P Series - Epoxy coated aluminum
Approvals:	Watertight L Series - UL, CSA, FM, CE, RoHS G Series - UL, CSA, CE, RoHS, CRN
	Explosion Proof: P Series - UL, CSA, CRN FACTORY SEALED CLASS I DIV 1 GROUPS B, C, & D CLASS II DIV 1 GROUPS E, F, & G

WETTED COMPONENTS

Actuator Seal:	Buna-N®, Teflon®, Viton®, 316L SS, or Monel®	
Process Connection: ¼ NPT Female (standard)	**Pressure Switches**	**Differential Switches**
	316 SS or Monel® for psi ranges	Nickel plated brass or 316 SS for psid ranges
	Epoxy coated carbon steel or 316 SS for IW ranges	Epoxy coated carbon steel or 316 SS for IWD ranges

GOLD Service

L-Series
Watertight Enclosure
Differential Pressure Switch

L-Series
Watertight Enclosure
Pressure Switch

G-Series
Watertight Enclosure
Differential Pressure Switch

G-Series
Watertight Enclosure
Pressure Switch

P-Series
Explosion-Proof Enclosure
Differential Pressure Switch

P-Series
Explosion-Proof Enclosure

ORDERING CODE Example:	GPSN4	H	B	25	100#	X6B
Enclosure						
GPSN4 - Single setpoint, fixed deadband, N4 - NEMA 4, 4X, IP65	GPSN4					
GPAN4 - Single setpoint, adjustable deadband, N4 - NEMA 4, 4X, IP65						
GPDN4 - Two independent adjustable setpoints, fixed deadband, N4 - NEMA 4, 4X, IP65						
LPSN4 - Single setpoint, fixed deadband, N4 - NEMA 4, 4X, IP66						
LPAN4 - Single setpoint, adjustable deadband, N4 - NEMA 4, 4X, IP66						
LPDN4 - Two independent adjustable setpoints, fixed deadband, N4 - NEMA 4, 4X, IP66						
PPSN7 - Single setpoint, fixed deadband, N7-NEMA 7/9, IP66, explosion proof Div, 1 & 2						
PDAN7 - Single setpoint, adjustable deadband, N4 - NEMA 4, 4X, IP66, explosion proof Div, 1 & 2						
PPDN7 - Two independent adjustable setpoints, fixed deadband, N4 - NEMA 4, 4X, IP66, explosion proof Div, 1 & 2						
GDSN4 - Single setpoint, fixed deadband, N4 - NEMA 4, 4X, IP65						
GDAN4 - Single setpoint, adjustable deadband, N4 - NEMA 4, 4X, IP65						
GDDN4 - Two independent adjustable setpoints, fixed deadband, N4 - NEMA 4, 4X, IP66						
LDSN4 - Single setpoint, fixed deadband, N4 - NEMA 4, 4X, IP66						
LDAN4 - Single setpoint, adjustable deadband, N4 - NEMA 4, 4X, IP66						
LDDN4 - Two independent adjustable setpoints, fixed deadband, N4 - NEMA 4, 4X, IP66						
PDSN7 - Single setpoint, fixed deadband, N7-NEMA 7/9, IP66, explosion proof Div, 1 & 2						
PDAN7 - Single setpoint, adjustable deadband, N7-NEMA 7/9, IP66, explosion proof Div, 1 & 2						
PDDN7 - Two independent adjustable setpoints, fixed deadband, N7-NEMA 7/9, IP66, explosion proof Div, 1 & 2						
Switch Elements For Single Setpoint with Adjustable Deadband - UL/CSA Listed						
H- General purpose, 10A - 125/250 Vac. 1/2A, 125Vdc, 1/4A, 250Vdc		H				
J - Hermetically sealed, general pupose - 11A, - 125/250 Vac, 5A, 30Vdc						
Single/Dual Switch Setpoint with Fixed Deadband - UL/CSA Listed						
C/CC - Heavy duty ac, 22A - 125/250 Vac						
F/FF - Sealed environment proof, 15A - 125/250 Vac. (estimated dc rating - 4A, 28Vdc, not UL listed)						
G/GG - General purpose, 15A - 125/250/480 Vac, ½A - 125 Vdc, ¼A - 250 Vdc (not listed at 480 Vac)						
H/HH - General purpose, 10A - 125/250 Vac 10A, Vdc (P series only)						
J/JJ - Hermetically sealed switch, general purpose, 11A, 125/250 Vac, 5A, 30 Vdc						
K/KK - Narrow deadband, 15A - 125/250 Vac. (estimated dc rating, 0.4A, 120 Vdc, not UL listed)						
L/LL - Hermetically sealed switch, gold contacts, 1A - 125 Vac						
M/MM - Low level (gold) contacts, 1A - 125 Vac						
P/PP - Hermetically sealed AC - 5A, 125/250 Vac. (estimated dc rating - 2.5A, 28Vdc, not UL listed)						
S/SS - Heavy duty dc, 10A - 125 Vac or dc, ⅛ HP - 125 Vac or dc.						
U/UU - Manual reset actuates on increasing pressure 15A, 125/250 Vac, 6A, 130Vdc						
Y/YY - High temperature 300°F (148°C) ambient, 15A, 125/250 Vac						
W/WW - Ammonia service - 5A, 125/250 Vac, 6A, 30 Vdc						
Actuator Seal						

	Temperature Limits			
Material	Ambient	Process		
B - Buna-N	-20°F to 150°F	0°F to 150°F	B	
V - Viton®	-20°F to 150°F	20°F to 300°F		
T - Teflon®	-20°F to 150°F	0°F to 150°F		
S - 316L SS	-20°F to 150°F	20°F to 300°F	Not available in vacuum, & inches of water ranges or pressures above 1,000 psi	
P - Monel®	-20°F to 150°F	20°F to 300°F	Not available in vacuum, & inches of water ranges or pressures above 1,000 psi	

Process Connections						
25- ¼ NPT Female				25		
06- ¼ NPT Female and ½ NPT Male combination						
07- ½ NPT Female						
Pressure Range (select from pressure range tables on pages 99-100)					100#	
Options - Select from options table 101 (If choosing an option(s) must include an "X")						X _ _

Distribuidc
CALFER DE MÉXICO®
CONTROLES AUTOMÁTICOS INDUSTRIALES
50 ANIVERSARIO
www.calfer.com.mx 01 800 0125 742 /CalferMx
soporte.tecnico2@calfer.com.mx

PRESSURE, DIFFERENTIAL PRESSURE RANGES

TABLE 1 - PRESSURE/VACUUM RANGES

Approximate Deadband Switch Element for Buna-N Diaphragm

See multiplier TABLE 3 for additional material multipliers

Nominal Ranges		Overpressure Ratings		LPA-GPA	LPS-GPS				LPD-GPD			
				Switch Element								
		Proof#	Minimum Burst psi	J, H	G	J, H	K, F	P	GG	JJ, HH	KK, FF	PP
Vacuum												
-30IMV	–760mmHg	250	400	6-24	2.5-4	6-24	1-2	1-2.5	3-5.5	4-6.5	1-2	1-2.5
Compound												
-30IMV/ 15#	–760mmHg/ 1.0 kg/cm²	250	400	6-24 3-12	2.5-4 1-2.5	4-6 1-3.5	1-2 0.5-1.5	1-2.5 0.5-2	3-5.5 1.5-5.5	4-6.5 1.5-4	1-2 1-2	1-2.5 1-2
Pressure												
30IW	750mmH_2O	20	35	4.0-27	1.5-3.5	2.0-4.0	0.5-1.0	0.7-2.0	2.1-4.9	2.8-5.6	0.7-1.4	0.7-2.8
6IW	1,500mmH_2O	20	35	5.0-54	1.5-4.0	2.5-5.0	0.5-1.4	1.0-2.5	3-5.6	3.5-7.0	0.7-2.0	2-3.5
100IW	2,500mmH_2O	20	35	8.5-90	2.0-5.5	4.0-8.5	1.0-2.0	1.4-3.0	4-7.7	5.6-11.7	1.4-2.8	1-4.2
150IW	3,750mmH_2O	20	35	18-135	5.0-11	10-18	1.5-3.0	2.0-6.0	7.0-16	14-25.1	2.1-4.2	5-9.2
15#	1.0 kg/cm²	500	1,500	2.5-13	1.0-1.5	1.0-2.5	0.5-1.0	0.75-1.5	1.4-2.1	1.4-3.5	0.7-1.4	1-1.4
30#	2.0 kg/cm²	500	1,500	3.0-27	1.0-2.8	1.0-3.2	0.75-1.5	1-1.8	1.4-5	3-6	1-2.1	1.4-2.5
60#	4.0 kg/cm²	500	1,500	5-54	2.0-4.0	2.0-4.5	1.0-2.0	1.0-2.5	3-7	4-8	1.4-2.8	1.4-3.5
100#	7.0 kg/cm²	1,000	3,000	10-90	3-6	5.0-10	1.0-2.5	1.4-3.2	7-12	7.0-14	1.4-3.5	3-7
200#	14 kg/cm²	1,000	3,000	18-180	7-14	10-18	1.0-4.0	5.0-8.0	10-23	14-25	1.4-5.6	7.0-11.2
400#	28 kg/cm²	2,400	3,000	45-360	16-30	16-45	4.0-8.0	5.0-15	22-42	22-63	5.6-11.2	7.0-21
600#	42 kg/cm²	2,400	3,000	75-540	16-50	20-75	5.0-15	6.0-25	22-70	28-105	7.0-21	8.0-35
1000#(1)	70 kg/cm²	12,000(1)	14,000	160-900	75-130	50-160	7.0-30	10-85	70-180	70-223	10-42	14-119
2000#	140 kg/cm²	12,000	14,000	350-1,800	150-200	150-350	20-50	25-110	209-279	209-488	28-70	35-154
3000#	210 kg/cm²	12,000	14,000	400-2,600	180-250	180-400	30-70	30-190	251-349	251-558	42-98	42-226

(1) Proof pressure is 4,000 psi with SS and Monel® welded diaphragms

TABLE 2 - DIFFERENTIAL PRESSURE RANGES

Approximate Deadband Switch Element for Buna-N Diaphragm

See multiplier TABLE 3 for additional material multipliers

Nominal Ranges		Overpressure Ratings		LDA-GDA	LDG-GDA				LDG-GDA			
				Switch Element								
		Static #	Minimum Proof #	J, H	G	J, H	K, F	P	GG	JJ, HH	KK, FF	PP
Differential Pressure												
30IWD	–760mmHg	5.4	21.6	4.0-27	1.3-3.5	2.0-4.0	0.5-1.0	0.7-2.0	2.1-4.9	2.8-5.6	0.7-1.4	0.7-2.8
60IWD	1,500mmH_2O	5.4	21.6	5.0-54	1.5-4.0	2.5-5.0	0.5-1.4	1.0-2.5	3-5.6	3.5-7.0	0.7-2.0	2-3.5
100IWD	2,500mmH_2O	5.4	21.6	8.5-90	2.0-5.5	4.0-8.5	1.0-2.0	1.4-3.0	4-7.7	5.6-11.7	1.4-2.8	1-4.2
150IWD	3,750mmH_2O	5.4	21.6	18-135	5.0-11	10-18	1.5-3.0	2.0-6.0	7.0-16	14-25.1	2.1-4.2	5-9.2
30#D	2.0 kg/cm²	500	1,500	3.0-27	1.0-2.8	1.0-3.2	0.75-1.5	1-1.8	1.4-5	3-6	1-2.1	1.4-2.5
60#D	4.0 kg/cm²	500	1,500	5-54	2.0-4.0	2.0-4.5	1.0-2.0	1.0-2.5	3-7	4-8	1.4-2.8	1.4-3.5
200#D	14 kg/cm²	1,000	3,000	18-180	7-14	10-18	1.0-4.0	5.0-8.0	10-23	14-25	1.4-5.6	7.0-11.2
400#D	28 kg/cm²	2,400	3,000	45-360	16-30	16-45	4.0-8.0	5.0-15	22-42	22-63	5.6-11.2	7.0-21

TABLE 3 - DEADBAND MULTIPLIER TABLE

Diaphragm Material	Multiply	Notes
Buna-N®	1.0	Multiplier table for additional diaphragm materials
Viton®	1.4	
Teflon®	1.7	
316 SS	1.7	
Monel®	1.7	

Distribuidor Autorizado CALFER

CALFER DE MÉXICO®
CONTROLES AUTOMÁTICOS INDUSTRIALES

50 ANIVERSARIO

www.calfer.com.mx 01 800 0125 742 /CalferMx

soporte.tecnico2@calfer.com.mx

PRESSURE, DIFFERENTIAL PRESSURE RANGES

TABLE 1 - PRESSURE/VACUUM RANGES

Nominal Ranges			Overpressure Ratings		Approximate Deadband Switch Element for Buna-N® Diaphragm See multiplier TABLE 3 for additional material multipliers								
					PPA	PPS				PPD			
					Switch Element								
			Proof psi	Minimum Burst psi	J, H	G	J, H	K, F	P	GG	JJ, HH	KK, FF	PP
Vacuum													
-30IMV	–760mmHg	-100 kPa	250	400	7-26	3-5	3-6.5	1-2	1-2.5	3-5	4-6.5	1-2	1-2.5
Compound													
-30IMV/ 15#	–760mmHg/ 1.0 kg/cm²	-100 kPa 100 kPa	250	400	10-25 4-13	3-5 1-2	4-6 1-3.5	1-2 0.5-1	1-2.5 0.5-1.2	3-5 2-4	2.5-4.5 1.3	1-2 0.5-1	1-2.5 0.5-1.2
Pressure													
30IMV	750mmH_2O	7.5 kPa	20	35	4-27	1.5-3.5	2-5	0.5-1	0.5-2	1.5-3.5	2-5	0.5-1	0.5-2
60IMV	1,500mmH_2O	15 kPa	20	35	5-54	1.5-3.5	2.5-5	0.5-1.3	1-2	1.5-3.5	2.5-5	0.5-1.3	1-2
100IMV	2,500mmH_2O	25 kPa	20	35	8.5-90	4-6	4-8.5	1-2	1-3	4-7	4-8.5	1-2	1-3
150IMV	3,750mmH_2O	37 kPa	20	35	18-135	5.0-11	10-18	1.5-3	2-6	8-14	10-18	1.5-3	2-6
15#	1.0 kg/cm²	100 kPa	500	1,500	2.5-13	1-2	1-3	0.5-1	0.5-1.2	1-2	1-3	0.5-1	0.5-1.2
30#	2.0 kg/cm²	200 kPa	500	1,500	3-26	1-2.5	2-4.5	0.5-1.5	0.5-1.5	1-2.5	2-4.5	0.5-1.5	0.5-1.5
60#	4.0 kg/cm²	400 kPa	500	1,500	5-54	2-4	4-7	1-2	1-2.5	2-4	4-7	1-2	1-2.5
100#	7.0 kg/cm²	700 kPa	1,000	3,000	10-90	5-7	5-10	1-2.5	2-4	5-7	5-10	1-2.5	2-4
200#	14 kg/cm²	1,400 kPa	1,000	3,000	20-180	10-15	10-18	1-4	5-8	10-20	15-35	3-6	5-8
400#	28 kg/cm²	2,800 kPa	2,400	3,000	45-360	16-30	16-45	4-8	5-15	16-30	16-45	4-8	5-15
600#	42 kg/cm²	4,200 kPa	2,400	3,000	75-540	16-50	20-75	5-15	6-25	16-50	20-75	5-15	6-25
1000#	70 kg/cm²	7,000 kPa	12,000	14,000	160-900	75-130	50-160	7-30	10-85	75-130	50-160	7-30	10-85
2000#	140 kg/cm²	14,000 kPa	12,000	14,000	350-1,800	150-200	150-350	20-50	25-110	15-200	150-350	20-50	25-110
3000#	210 kg/cm²	21,000 kPa	12,000	14,000	400-2,600	180-250	180-400	30-70	50-250	180-250	180-400	30-70	50-250

TABLE 2 - DIFFERENTIAL PRESSURE RANGES

Nominal Ranges		Overpressure Ratings		Approximate Deadband Switch Element for Buna-N® Diaphragm See multiplier TABLE 3 for additional material multipliers								
				PDA	PDS				PDD			
				Switch Element								
		Static psi	Minimum Proof psi	J, H	G	J, H	K, F	P	GG	JJ, HH	KK, FF	PP
Differential Pressure												
30IWD	–760mmHg	5.4	21.6	5.5-27	3-5	4-6.5	0.5-1	0.5-2	3-5	4-6.5	0.5-1	0.5-2
60IWD	1,500mmH_2O	5.4	21.6	5.5-54	3-5	4.5-6.5	0.5-1.3	1-2	3.5	4-6.5	0.6-1.3	1-2
100IWD	2,500mmH_2O	5.4	21.6	8.5-90	4-6	4.0-8.5	1-2	1-3	4-7	4-8.5	1-2	1-3
150IWD	3,750mmH_2O	5.4	21.6	18-135	5-11	10-18	1.5-3	2-6	8-12	10-18	1.5-3	2-6
30#D	1.0 kg/cm²	500	1,500	2.5-13	1-2	1-3	0.5-1	0.5-1.2	1-2	1-3	0.5-1	0.5-1.2
60#D	2.0 kg/cm²	500	2,000	6.5-54	1-2.5	2-4.5	1-1.5	1-1.5	1-2.5	2-4.5	0.5-1.5	0.5-1.5
100#D	7.0 kg/cm²	1,000	4,000	10-90	5-7	5-10	1-2.5	2-4	5-7	5-10	1-2.5	2-4
200#D	14 kg/cm²	1,000	4,000	20-180	10-15	10-18	1-4	5-8	10-20	10-18	3-6	5-8
400#D	28 kg/cm²	1,000	8,000	45-360	16-30	16-45	4-8	5-15	16-30	16-45	4-8	5-15

TABLE 3 - MULTIPLIER TABLE

Diaphragm Material	Multiply	Notes
Buna-N®	1.0	Multiplier table for additional diaphragm materials
Viton®	1.4	
Teflon®	1.7	
316 SS	1.7	
Monel®	1.7	

Distribuidor Autorizado CALFER
CALFER DE MÉXICO®
CONTROLES AUTOMÁTICOS INDUSTRIALES
50 ANIVERSARIO
www.calfer.com.mx 01 800 0125 742 /CalferMx
soporte.tecnico2@calfer.com.mx

OPTIONAL FEATURES AND ACCESSORIES

					Pressure		Differential Pressure	
Code	Description	G Series	L Series	P Series	psi	inH_2O	psid	inH_2O
CH	Chained cover	•	•	•	•	•	•	•
FP	Fungus proofing	•	•		•	•	•	•
FS	Factory adjusted setpoints	•	•	•	•	•	•	•
G5	Gas⁄Oil UL Limit control to 150 inH_2O (LDS only)		•					•
G6	Gas⁄Oil UL Limit control to 600 psi (LDS only)		•		•			
G8	Steam limit control to 600 psi		•		•			
G9	Fire safe actuator High operating pressure for inH_2O ranges	•	•	•	•			
HX	40 psi Static (Pressure and D⁄P) 100 psi Proof (Pressure) 160 psi Proof (D⁄P)	•	•	•		•	• (N⁄A P Series)	
JL	¾″ to ½″ Reducing bushing	•	•	•	•	•	•	•
K3	Terminal blocks	•	•	•	•	•	•	•
NH	Tagging SS	•	•	•	•	•	•	•
PK	Pilot lights		•		•	•	•	•
PM	¾″ Sealed conduit connection with 16″ lead wires	•	•	•	•	•	•	•
PM	316 SS pressure connection for H_2O ranges	•	•	•	•	•		•
UD	316 SS Pressure Connection for psid ranges	•	•	•			•	
2C	DPDT with Single Setpoint Adjustment	•	•		•	•	•	•
6B	Cleaned for oxgen service	•	•	•	•		•	
FM	FM Approval		•		•	•	•	•
Y53A	1½″ Sanitary seal with glycerin fill with 3A Approval	•	•					
Y63A	2″ Sanitary seal with glycerin fill with 3A Approval	•	•			•		
HS	High static operating pressure for psi range D/P	•	•	•			•	
D2	Dual seal rating			•	•			•
C8	CSA Approval (standard on G & L)			•	•	•	•	•

ASHCROFT®
Trust the shield.®

FEATURES

- Setpoint adjustability 15-100% of range
- Dual chamber for safety
- Explosion proof enclosure with hermetically sealed switch elements

SPECIFICATIONS

Set Repeatability (Accuracy):	±1% of span (additional setpoint shift of ±1% of range per 50°F from initial setpoint set at 70°F typical)
Switch Type:	SPDT or 2 SPDT DPDT action
Setpoint:	Single setpoint - Factory set or field adjustable
Deadband:	Fixed
Enclosure Ratings:	NEMA 3, 4, 7, 9, IP66
Enclosure Material:	Anodized aluminum
Approvals:	UL, CSA CLASS I DIV 1, DIV 2 GROUPS A, B, C, & D CLASS II DIV 1 GROUPS E, F, & G

WETTED COMPONENTS

Actuator Seal:	Buna-N®, Teflon®, Viton®, 316L SS
Process Connection:	316 SS

F-Series
Explosion-Proof Enclosure

7A - NOMINAL RANGE AND PERFORMANCE TABLE- BUNA-N® (CODE B)

Nominal Ranges		Proof Press.	Deadband (by Switch Element)	
psi	bar	psi	Code J	Code P, L
30 IMV	–1	1,000	1.8-8.0	0.4-5.0
30#	2	1,000	0.2-1.5	0.1-1.3
60#	4	1,000	0.2-2.5	0.3-1.5
100#	7	1,000	0.5-4.0	0.5-2.5
200#	14	1,000	1.5-8.0	0.5-5.0
400#	28	1,600	3.0-15.0	1.5-9.0
600#	40	2,400	4.0-28.0	2.0-15.0
1000#	70	4,000	6.0-50.0	3.0-30.0

7B - NOMINAL RANGE AND PERFORMANCE TABLE- HIGH PRESSURE (CODE H)

Nominal Ranges		Proof Press.	Deadband (by Switch Element)	
psi	bar	psi	Code J	Code P, L
1000#	70	12,000	50-100	N/A
2000#	140	12,000	100-200	N/A
3000#	210	12,000	150-300	N/A
4000#	280	16,000	150-350	N/A

7C - NOMINAL RANGE AND PERFORMANCE TABLE- WELDED SS (CODE S)

Nominal Ranges		Proof Press.	Deadband (by Switch Element)	
psi	bar	psi	Code J	Code P, L
30#	2	1,000	1.0-4.5	0.5-3.5
60#	4	1,000	1.0-5.0	0.5-4.0
100#	7	1,000	1.5-10.0	1.0-6.0
200#	14	1,000	2.0-18.0	1.0-12.0
400#	28	1,600	5.0-32.0	2.0-20.0
600#	40	2,400	9.0-50.0	4.0-30.0
1000#	70	4,000	15.0-80.0	7.0-50.0

7D - NOMINAL RANGE AND PERFORMANCE TABLE- VITON®, TEFLON®, SS w/VITON O-RING (CODES V, T & R)

Nominal Ranges		Proof Press.	Deadband (by Switch Element)	
psi	bar	psi	Code J	Code P, L
30 IMV	–1	1,000	1.5-10.0	0.5-7.0
30#	2	1,000	0.5-3.5	0.2-2.5
60#	4	1,000	0.5-4.0	0.5-3.0
100#	7	1,000	1.0-7.0	1.0-4.5
200#	14	1,000	2.5-12.0	1.0-8.5
400#	28	1,600	5.0-30.0	2.0-17.0
600#	40	2,400	8.0-48.0	4.0-34.0
1000#	70	4,000	10.0-80.0	5.0-55.0

Distribuidor Autorizado CALFER
CALFER DE MÉXICO®
CONTROLES AUTOMÁTICOS INDUSTRIALES
50 ANIVERSARIO
www.calfer.com.mx 01 800 0125 742 /CalferMx
soporte.tecnico2@calfer.com.mx

ORDERING CODE Example:	FPS	N7	P	B	25	XFS	100#
Function							
FPS - Single setpoint, fixed deadband	FPS						
Enclosure							
N7 - NEMA 3, 4, 7, 9 & IP66, anodized aluminum for hazardous locations		N7					
Switch Elements, UL/CSA Listed							
P- Hermetically sealed, narrow deadband - 5A, - 125/250 Vac			P				
J - Hermetically sealed, general purpose - 11A, - 125/250 Vac, 5A, 30Vdc							
L - Hermetically sealed, gold contacts, 1A - 125 Vac							
JJ - Dual hermetically sealed, general purpose, 11A, 125/250 Vac, 5A, 30 Vdc							
LL - Dual hermetically sealed, gold contacts, 1A - 125 Vac							
Actuator Seal							

	Temperature Limits.		
Material	Ambient	Process	
B - Buna-N®	-20°F to 150°F	0°F to 150°F	B
V - Viton®	-20°F to 150°F	20°F to 200°F	
T - Teflon®	-20°F to 150°F	0°F to 150°F	
R - SS diaphagm/Viton® O-ring	-20°F to 150°F	0°F to 150°F	
S - 316L SS	-20°F to 150°F	20°F to 200°F	
H - SS piston/Viton® O-ring	-20°F to 150°F	20°F to 200°F	

Process Connections							
25- ¼ NPT Female					25		
07- ½ NPT Female							
Options (if choosing an option(s) must include an "X")						X_ _	
FP - Fungus proofing							
FS - Factory adjusted setpoint						FS	
K3 - Terminal blocks							
NH - SS tag							
6B - Clean for oxygen service							
Pressure Range (select from pressure range table on page 102)							
100# - 100 psi							100#

DDS-Series Differential Pressure Switch

ASHCROFT®
Trust the shield.®

FEATURES

- Rugged enclosure
- High static pressure capability up to 1,500 psi
- Wide selection of switch elements and wetted materials
- Explosion proof enclosure

DDS-Series
250 psi Differential
Pressure Switch

DDS-Series
1,500 psi Differential
Pressure Switch

SPECIFICATIONS

Set Repeatability (Accuracy):	±1% of span (additional setpoint shift of ±1% of range per 50°F from initial setpoint set at 70°F typical)
Switch Type:	SPDT or DPDT
Setpoint:	Single setpoint, field adjustable
Deadband:	Fixed
Enclosure Ratings:	Watertight: NEMA 4X &12 Explosion proof housing
Enclosure Material:	Cast aluminum
Approvals:	Watertight and explosion proof: UL (Class 1, Div. 1, Groups C & D)

WETTED COMPONENTS

Actuator Seal:	Buna-N®, Teflon®, Viton®
Process Connection:	¼ NPT Female, aluminum or SS

Maximum Deadband in IWD per Micro Switch Type for 50 psi Static Range

Range (IWD)	1K	1G	1M	1J	2K	2G	2M	2J
0-1.5	0.4	0.7	0.7	4.2	0.8	1.4	1.4	8.4
0-3.0	0.6	1.2	1.2	7.2	1.2	2.4	2.4	14.4
0-6.0	0.7	1.4	1.4	8.4	1.4	2.8	2.8	16.8

Maximum Deadband in IWD per Micro Switch Type for 250 psi Static Range

Range (IWD)	1K	1G	1M	1J	2K	2G	2M	2J
0-15	0.4	0.7	0.7	4.2	0.8	1.4	1.4	8.4
0-30	0.6	1.2	1.2	7.2	1.2	2.4	2.4	14.4
0-60	0.7	1.4	1.4	8.4	1.4	2.8	2.8	16.8
0-100	0.8	1.6	1.6	9.6	1.6	3.2	0.2	19.2
0-150	1.2	2.5	2.5	15.0	2.4	5.0	5.0	30.0

Maximum Deadband in IWD per Micro Switch Type for 1,500 psi Static Range

Range (IWD)	1K	1G	1M	1J	2K	2G	2M	2J
0-6	1.1	2.2	2.2	6.6	2.2	4.4	4.4	13.2
0-15	1.2	2.3	2.3	6.9	2.4	4.6	4.6	13.8
0-30	1.2	2.3	2.3	6.9	2.4	4.6	4.6	13.8
0-60	1.3	2.5	2.5	7.5	2.6	5.0	5.0	15.0
0-100	1.5	2.9	2.9	8.7	3.0	5.8	5.8	17.4
0-150	1.7	3.4	3.4	10.2	3.4	6.8	6.8	20.4

RANGE

1.5 IWD	0 - 1.5 Inches of Water Differential
6 IWD	0 - 6.0 Inches of Water Differential
15 IWD	0 - 15.0 Inches of Water Differential
30 IWD	0 - 30.0 Inches of Water Differential
60 IWD	0 - 60.0 Inches of Water Differential
100 IWD	0 - 100.0 Inches of Water Differential
150 IWD	0 - 150.0 Inches of Water Differential
3.7MBD	0 - 3.7 mBar Differential
15MBD	0 - 15.0 mBar Differential
35MBD	0 - 35.0 mBar Differential
75MBD	0 - 75.0 mBar Differential
150MBD	0 - 150.0 mBar Differential
250MBD	0 -250.0 mBar Differential
350MBD	0 - 350.0 mBar Differential
38MWD	0 - 38.0 mmH_2O Differential
150MWD	0 - 150.0 mmH_2O Differential
350MWD	0 - 350.0 mmH_2O Differential
750MWD	0 - 750.0 mmH_2O Differential
1500MWD	0 - 1,500.0 mmH_2O Differential
2500MWD	0 - 2,500.0 mmH_2O Differential
3500MWD	0 - 3,500.0 mmH_2O Differential
0.37KPD	0 - 0.37 kPa Differential
1.5KPD	0 - 1.5 kPa Differential
3.5KPD	0 - 3.5 kPa Differential
7.5KPD	0 - 7.5 kPa Differential
15KPD	0 - 15 kPa Differential
25KPD	0 - 25 kPa Differential
35KPD	0 - 35 kPa Differential

Distribuidor Autorizado CALFER
CALFER DE MÉXICO®
CONTROLES AUTOMÁTICOS INDUSTRIALES
50 ANIVERSARIO
www.calfer.com.mx 01 800 0125 742 /CalferMx
soporte.tecnico2@calfer.com.mx

ASHCROFT®
Trust the shield.®

ORDERING CODE Example:	DDSN4	1G	S	B	A	25	L	100#	60IWD	15R	XC4
Function/Enclosure											
DDSN4 - Single setpoint, fixed deadband. Watertight NEMA 4X housing	DDSN4										
DDSN7 - Single setpoint, fixed deadband. Explosion Proof, Class 1, Groups C & D, Class 2, Groups E, F & G											
Switch Elements											
Single Switch											
1G - General purpose, SPDT – 15A @ 125/250/480 VAC		1G									
1K - Narrow deadband, SPDT - 15A @ 125/250/480 VAC											
1M - Gold contact, SPDT –1 A @ 125 VAC											
1J - Hermetically sealed, SPDT – 1A @125 VAC, 1A @ 28 VDC resistive, 0.5A @ 28 VDC Inductive											
Dual Switch											
2G - General purpose, DPDT – 15A @ 125/250/480 VAC											
2K - Narrow deadband, DPDT - 15A @ 125/250/480 VAC											
2M - Gold contact, DPDT – 1 A @ 125 VAC											
2J - Hermetically sealed, DPDT – 1A @125 VAC, 1A @ 28 VDC resistive, 0.5A @ 28 VDC Inductive											
Electrical Connection (¾ NPT female conduit connection)											
S - Screw terminals on Micro Switch			S								
Actuator Seals For DDS Series											
Material Ambient Temp.											
B - Buna-N®, -20°F to 180°F				B							
V - Viton®, -20°F to 180°F (not available with 1,500 psi static range H)											
T - Teflon®, -20°F to 180°F (not available with 1,500 psi static range H)											
Lower Housing Material											
A - Aluminum housing and process connections					A						
S - 316 SS housing and process connections											
Process Connection											
25 - ¼ NPT Female						25					
Static Pressure Range											
L - 50 psi maximum static pressure 0-1.5 through 0-0.6 IWD							L				
L - 250 psi maximum static pressure 0-15 through 0-150 IWD											
H - 1,500 psi maximum static pressure 0-6 through 0-150 IWD											
Static Pressure Setpoint											
_____ Setpoint static pressure (5 characters maximum). Units allowed #(psi), BR (Bar), KG (kg/cm²), MP (MPa)								100#			
NSR - No static setpoint required											
Differential Pressure Range (see pressure range table on page 104)											
60IWD - 0-60 inH_2O)									60IWD		
Setpoint/Direction											
_____R Factory-set rising (Increasing) setpoint (5 characters maximum)										15R	
_____D Factory-set decreasing setpoint (5 characters maximum)											
NSR - Not factory set											
Options (if choosing an option(s) must include an "X")											X _ _
NH - SS tag wired to case											
JK - Dual ¾ NPT Female conduit connections											
C4 - Certified calibration report											C4
NN - Paper tag											

Distribuidor Autorizado CALFER
CALFER DE MÉXICO®
CONTROLES AUTOMÁTICOS INDUSTRIALES
50 ANIVERSARIO
www.calfer.com.mx 01 800 0125 742 /CalferMx
soporte.tecnico2@calfer.com.mx

ASHCROFT®
Trust the shield.®

FEATURES

- Multi-turn potentiometers allow easy setpoint and deadband adjustments
- Switch status indication (NPI only)
- SPDT 10 amp relay output

GOLD Service

SPECIFICATIONS

Set Repeatability (Accuracy):	±0.50% full scale
Switch Type:	SPDT
Setpoint:	Single setpoint
Deadband:	Adjustable deadband
Enclosure Ratings:	NEMA 3, 4, 4X and 13 (IP65)
Enclosure Material:	Anodized aluminum

WETTED COMPONENTS

Diaphragm:	17-4PH SS
Process Connection:	316 SS

PRESSURE RANGES

Nominal Range	Setpoint Limits	psi Proof	psi Burst
60#	3-60	120	480
100#	5-100	200	800
200#	10-200	400	1,600
300#	15-300	600	2,400
500#	25-500	1,000	4,000
750#	35-750	1,500	6,000
1000#	50-1,000	2,000	8,000
2000#	100-2,000	4,000	16,000
3000#	150-3,000	4,500	20,000
5000#	250-5,000	7,500	22,500
7500#	375-7,500	9,000	25,000
10000#	500-10,000	12,000	30,000
15000#	750-15,000	18,000	45,000
20000#	1,000-20,000	24,000	60,000

(Temperature specifications (70°F ref.) -2°F to 160°F. Setpoint shift of up to ±2% of range per 50°F change can be expected.)

NPI-Series
Watertight Enclosure
Pressure Switch With Indication

Distribuidor Autorizado CALFER
CALFER DE MÉXICO®
CONTROLES AUTOMÁTICOS INDUSTRIALES
50 ANIVERSARIO
www.calfer.com.mx 01 800 0125 742 /CalferMx
soporte.tecnico2@calfer.com.mx

ORDERING CODE Example:	NPA	N4	D	L	S01	XEA	30#
Function							
NPA - Single setpoint, adjustable deadband	NPA						
NPI - Single setpoint, adjustable deadband, process and setpoint indication							
Enclosure							
N4 - NEMA 3, 4, 4X, 13 & IP66		N4					
Output							
D - SPDT relay (10A, 250 VAC, 30A, 30 VDC)			D				
I - SPDT relay (10A, 250 VAC, 30A, 30 VDC) and 4 to 20 mA current output							
Power Requirements							
L - 110 Vac, 50/60Hz				L			
C - 24 Vdc							
V - 250 Vac, 50/60Hz							
Pressure Connection							
S01- ⅛ NPT Male					S01		
S02 - ¼ NPT Male							
S03 - ⅛ NPT Female							
S04 - ¼ NPT Female							
S05 - 7/16-20 SAE-¼ SAE							
S06 - ½ NPT Male, ¼ NPT Female							
S07 - ¼ AMINCO® Female							
Options (If choosing an option(s) must include an "X")						X _ _	
EA - External Setpoint Adjustment						EA	
Pressure Range (select from pressure range table on page 106)							
30# - 30 psi							30#

ASHCROFT®
Trust the shield.®

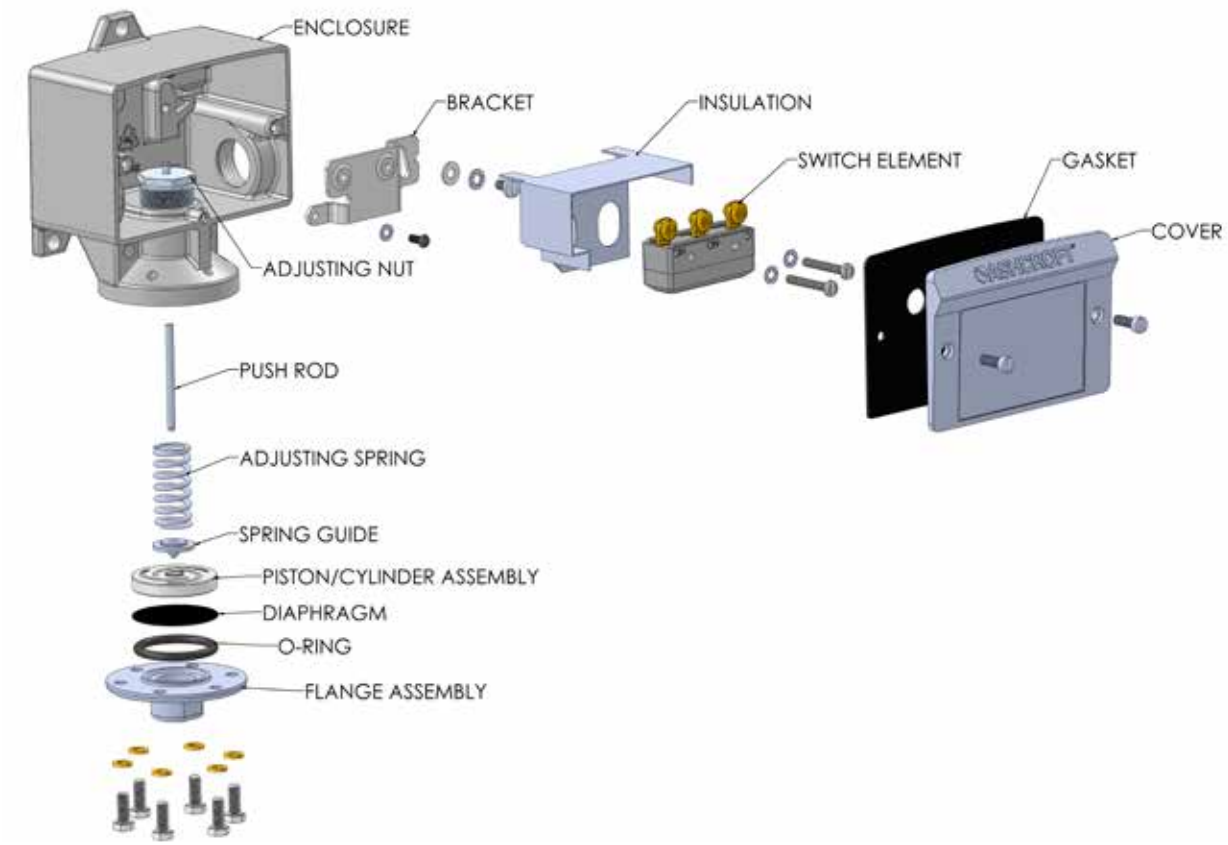

PRESSURE, TEMPERATURE & DIFFERENTIAL PRESSURE SWITCH SELECTION

Before making your selection, consider the following:

1. Actuator

The actuator responds to changes in pressure, temperature or differential pressure and operates the switch element in response to these changes.

The actuator is normally exposed to process fluid and must therefore be chemically compatible with it. The following may be used to help select actuator type:

For nominal pressure ranges of 0-15 psi through 0-3,000 psi, the standard actuator is a diaphragm-sealed piston. In this design, process pressure acts on the piston area, causing it to overcome the adjustment spring force to actuate a snap-action switch. A diaphragm and O-ring seal the process media from the switch. Diaphragms are available in a range of materials, including Viton®, Buna N® and Teflon®. The standard process connection is stainless steel. An optional Monel® pressure connection is available.

For ˝ H_2O Pressure and Differential Pressure Ranges, a diaphragm actuator is used. In this design, the standard pressure connections are carbon steel. Diaphragms are available in Viton, Buna N and Teflon. Always review process temperature limits before making seal selections. Optional stainless steel pressure connections are available (option XTA).

For High Differential Pressure Actuator Ranges, 3-15 to 60-600 psid, a Dual Diaphragm-Sealed Piston Actuator is used. This actuator is designed to for high static-pressure applications. The standard pressure connections are nickel-plated brass. Diaphragms are available in Viton, Buna N and Teflon. Always review process temperature limits before making seal selections. Optional stainless steel pressure connections are available (option XUD).

The standard Ashcroft temperature actuator employs a SAMA Class II system for all temperature ranges. In this design, vapor pressure contained in a sealed thermal system is applied to a sensing element which actuates a switch. Sensing occurs at the interface between liquid and vapor at the "sensitive" portion of the bulb. Bulb extensions and capillary are normally filled with vapor and have little effect on the setpoint, regardless of variations in ambient temperature variations; therefore no ambient compensation is required. Various filling materials are available, including Propane, Butane, Methyl Alcohol, N Propyl Alcohol and Xylene. High over temperature capability is possible with this type of system. For test results, the bulb should be mounted within 60 degrees of vertical to assure the liquid remains in the bulb.

2. Enclosure

The enclosure protects the switch element and mechanism from the environment and has provisions for mounting and wiring. All Ashcroft switch enclosures are epoxy-coated aluminum or stainless steel for maximum corrosion resistance.

Ashcroft enclosures include watertight cover gaskets, external mounting holes and one or two ¾ NPT electrical conduit holes for ease of installation. Pressure switches may also be mounted directly to the process by means of the standard ¼ NPTF or optional ½ NPT pressure connection.

Note: When installing Ashcroft switches, refer to instruction sheets included with each switch, the National Electrical Code, and any other local codes or requirements to assure safety.

3. The Switching Function

Most applications for alarm and shutdown are satisfied by single setpoint, fixed deadband models. For high/low or alarm and shutdown, the dual setpoint models may be selected. For pump, compressor, level and other control applications, an adjustable deadband model is often the best choice.

4. The Switch Element

The electrical switching element must be compatible with the electrical load being switched. For ease of selection, all electrical switching elements are snap acting, SPDT (single pole-double throw), or 2 (SPDT). Select a switch element with electrical rating that exceeds the electrical rating of the device being controlled by the switch. For better reliability and safety, optional Hermetically Sealed switching elements may be specified.

Distribuidor Autorizado CALFER
CALFER DE MÉXICO®
CONTROLES AUTOMÁTICOS INDUSTRIALES
50 ANIVERSARIO
www.calfer.com.mx 01 800 0125 742 /CalferMx
soporte.tecnico2@calfer.com.mx

Product Selection Information

ADDITIONAL SWITCH TERMINOLOGY

Accuracy – (See repeatability) Accuracy normally refers to conformity of an indicated value to an accepted standard value. There is no indication in switch products; thus, instead, the term repeatability is used as the key performance measure. Ashcroft switch accuracy is typically ±1% of nominal range.

Automatic Reset Switch – Switch which returns to the normal state when actuating variable (Pressure or Temperature) is reduced.

Adjustable or Operating Range – The part of the nominal range over which the switch setpoint may be adjusted. Normally about 15% to 100% of the nominal range for pressure and differential pressure switches and the full span for temperature switches.

Burst Pressure – The maximum pressure that may be applied to a pressure switch without causing leakage or rupture. This is normally at least 400% of nominal range for Ashcroft switches. Switches subjected to pressures above the nominal range can be permanently damaged.

Deadband – The difference between the setpoint and the reset point, normally expressed in units of the actuating variable. Sometimes referred to as differential.

Explosion Proof – A term commonly used in industry referring to enclosures capable of withstanding an internal explosion of a specified gas without igniting surrounding gases. Strict installation practices in accordance with the national electrical code are also required for safety.

Fixed Deadband – Deadband is a fixed function of the pressure switch and not adjustable.

Hermetically Sealed Switch – A switch element whose contacts are completely sealed from the environment to provide additional safety and reliability. Contact arc cannot cause an explosion and atmospheric corrosive elements cannot affect the contacts.

Manual Reset Switch – Pressure or Temperature switch in which contacts remain actuated even after the actuating variable returns to normal. On Ashcroft manual reset switches, a button must be pushed to reset the contacts.

National Electrical Manufacturers Association (NEMA) – This group has defined several categories of enclosures, usually referred to as "types." Further, they designate certain features and capabilities each type must include. For example, among other features, a NEMA 4 enclosure must include a threaded conduit connector, external mounting provision and cover gaskets. When selecting a NEMA 4 enclosure from any manufacturer, a buyer is assured of receiving these features.

NEMA 4 – Watertight and dusttight enclosures intended for use indoors or outdoors to protect the equipment against splashing, falling or hose-directed water, external condensation and water seepage. They are also sleet-resistant.

NEMA 4X – Watertight, dusttight and corrosion-resistant enclosures with same qualifications as NEMA 4, but with added corrosion resistance.

NEMA 7 – Enclosures for indoor Class I, Division 1 hazardous locations with gas or vapor atmospheres.

NEMA 9 – Enclosures for indoor Class II, Division 1 hazardous locations with combustible dust atmospheres.

Normal Switch Position – Contact position before actuating pressure (or variable) is applied. Normally closed contacts open when the switch is actuated. Normally open contacts close when the switch is actuated.

Normally Closed – Refers to switch contacts that are closed in the normal switch state or position (unactuated). A pressure change opens the contacts.

Normally Open Switch – Refers to the contacts that are open in the normal switch state or position (unactuated). A pressure change closes the contacts.

Overpressure Rating(s) – A nonspecific term that could refer to either burst or proof pressure, or both.

Proof Pressure – The maximum pressure which may be applied without causing damage. This is determined under strict laboratory conditions including controlled rate of change and temperature: This value is for reference only. Consult factory for applications where switch must operate at pressures above nominal range or reference temperature (70°F).

Repeatability (Accuracy) – The closeness of agreement among a number of consecutive measurements of the output setpoint for the same value of the input under the same operating conditions, approaching from the same direction, for full-range traverses. Ashcroft switch repeatability is typically ±1% of nominal range.
Note: It is usually measured as nonrepeatability and expressed as repeatability in percent of span or nominal range. It does not include hysteresis or deadband.

Reset Point – The reset point is the Pressure, Temperature or Differential Pressure Value where the electrical switch contacts will return to their original or normal position after the switch has activated.

Setpoint – The setpoint is the Pressure, Temperature or Differential Pressure value at which the electrical circuit of a switch will change state or actuate. It should be specified either on increase or decrease of that variable. (See also reset point.)

Single-Pole Double Throw (SPDT) Switching Element – A SPDT switching element has one normally open, one normally closed, and one common terminal. The switch can be wired with the circuit either normally open (N/O) or normally closed (N/C). SPDT is standard with most Ashcroft pressure and temperature switches.

Snap Action – In switch terminology, snap action generally refers to the action of contacts in the switch element. These contacts open and close quickly and snap closed with sufficient pressure to firmly establish an electrical circuit. The term distinguishes products from mercury bottle types that were subject to vibration problems.

Static Pressure – For differential pressure switches, static pressure refers to the lower of the two pressures applied to the actuator.

DIFFICULT PROCESS MEDIA

When specifying pressure or temperature switches, the material in contact with the media must be compatible with it. Otherwise, failure could occur, resulting in leakage, injury, loss of life, property or production. The user should review prior experience with materials of construction in the process for guidance in material selection. If this is not appropriate, contact Customer Service for assistance. Relevant information such as process media, concentration of each constituent, temperature, pressure, the presence of contaminants, particulates, vibration or pulsation is necessary to make the best recommendation. Some applications are best handled by adding an Ashcroft diaphragm seal to isolate the fluid media from the pressure or differential pressure switch.

Diaphragm seals are recommended where:

- The process media could clog the pressure element.
- The process media temperature is above or below the ratings of the actuator seal materials.
- The application calls a for sanitary process connection.

Note: The addition of a diaphragm seal may increase the deadband and response time of the pressure switch to process pressure changes. Please consult Customer Service for details.

Distribuidor Autorizado CALFER
CALFER DE MÉXICO®
CONTROLES AUTOMÁTICOS INDUSTRIALES
50 ANIVERSARIO
www.calfer.com.mx 01 800 0125 742 /CalferMx
soporte.tecnico2@calfer.com.mx

ASHCROFT®
Trust the shield.®

Additional Pressure and Temperature Switch Application Information

OXIDIZING MEDIA

When specifying a pressure switch for use in oxidizing media, such as chlorine, oxygen and several other chemical compounds, the wetted materials must be compatible with the media, and the switch should be cleaned for oxygen service. This is necessary to remove any residue that might react violently with the oxidizing media. Specify option X6B (clean for oxygen service).

STEAM SERVICE

In order to prevent live steam from coming into contact with the switch actuator, a siphon filled with water should be installed between the switch and the process line. We recommend the optional stainless steel welded process connection and diaphragm even though Viton® is rated for use with steam. Experience has shown that in many steam applications, the 300°F high temperature limit of viton is exceeded by steam under pressure.

In some boiler applications, a special UL listing, "MBPR", which requires unique features is needed. Ashcroft offers these features with option XG8.

HIGH TEMPERATURE PROCESS

Refer to the actuator seal table for process temperature limits for pressure switch actuators. Pressure switches mounted directly to the process can withstand up to 300°F when equipped with optional viton, stainless steel or monel wetted parts. If process temperature exceeds 300°F, four feet of ½″ tubing between the process and the switch will generally protect the switch from damage.

Alternatively, an Ashcroft diaphragm seal can be used to isolate the switch from the hot process.

VIBRATION

Generally, vibration will not harm Ashcroft pressure switches. However, premature tripping may occur under severe conditions. This tends to be annoying, but repeatable for a given situation and might be in the order of 5% to 10% of switch range from the setpoint, i.e. a 100 psi switch set at 50 psi on increasing pressure might trip somewhere between 40 and 45 psi on increasing pressure. This would not reduce the life of the pressure switch.

The best approach in this type of application is to mount the switch remotely, connecting the switch to the process or equipment with flexible tubing. If this is not possible, consider the use of the Belleville actuator, option XG3.

PULSATION

Pressure pulsation below the range of the pressure switch will not harm it. However, because the switch can react to pressure pulses less than one second duration, it might be desirable to include a dampening device. Several Ashcroft accessories such as snubbers address this situation. Consult Customer Service for more information.

MOUNTING

All Ashcroft pressure and differential pressure switches with snap acting contacts may be mounted in any position. This is an important advantage of snap acting switch designs.

SWITCH ELEMENT SELECTION

B-Series switches are available with a wide variety of snap acting switch elements to meet most electrical requirements. The standard contact arrangement is single pole, double throw (SPDT). This includes both normally open and normally closed contacts. Standard contact material is fine silver which generally is suitable for switching 8 volts or more, up to the rating in the Switch Element Selection Table. When switching less than 8 volts, optional Gold Alloy contacts are recommended.

Optional Dual, or 2 SPDT contacts may be supplied in B-Series enclosures for applications requiring two switch functions at the same setpoint. These contacts are technically not double pole, double throw (DPDT). They are synchronized at the factory to actuate within 1% of nominal range of each other. For simultaneous actuation of 2 SPDT contacts, option XG3 should be ordered.

INFORMATION & GUIDELINES FOR SETTING ASHCROFT PRESSURE, TEMPERATURE AND DIFFERENTIAL PRESSURE SWITCHES

All Ashcroft pressure, temperature and differential pressure switches can be set at any point between about 15% and 100% of the range as designated on the label or the nominal range table.

Ashcroft pressure and temperature switches can be either set in the field or ordered from the factory preset to your requirements. When set at the factory, the specification is ±1% of the nominal range.

HAZARDOUS LOCATIONS

a. **Division I.**
Ashcroft 700 series or other explosion proof enclosures are required to meet the requirements of Division I Hazardous Locations as defined by the National Electrical Code.

b. **Division II.**
These enclosures also meet the less stringent requirements for Division II Hazardous Locations. Alternatively, Ashcroft 400 series or other watertight enclosures, with hermetically sealed switch elements are approved for use in Division II hazardous locations.

c. **Intrinsic Safety.**
Any Ashcroft pressure or temperature switch may be used with an approved barrier in most intrinsically safe systems. These switches do not create or store energy and are therefore designated "simple devices'' in these systems.
Exception: Ashcroft N series electronic pressure switches require power and may not be suitable for use in all intrinsically safe systems.

c. **ATEX.**
ATEX is a European designation that deals with standards for equipment and protective systems intended for use in potentially explosive atmospheres. This approval is required for switches intended for use in hazardous locations, especially important to OEMs who export to Europe and contractors specifying or purchasing products for European applications.

Distribuidor Autorizado CALFER
CALFER DE MÉXICO®
CONTROLES AUTOMÁTICOS INDUSTRIALES
50 ANIVERSARIO
www.calfer.com.mx 01 800 0125 742 /CalferMx
soporte.tecnico2@calfer.com.mx

TRANSDUCERS/ TRANSMITTERS

A2, A2X, A4,..... 112-113
G2, G3, T2..... 114-115
Pressure Ranges 116
K1, KX and KS 117-118
K2 and K8..... 119-120
GC35..... 121-122
GC51..... 123-124
GC31..... 125-126

A2, A2X, A4 Pressure Transmitter

ASHCROFT®
Trust the shield.®

FEATURES

- Rugged housing
- Highly configurable: wide selection of pressure ranges, pressure connections and electrical terminations
- Output: select voltage or current versions
- Available with externally adjustable zero and span access

GOLD Service

A2
Transducer

A2X
Transducer

A4
Transducer

PERFORMANCE SPECIFICATIONS		
Reference Temperature:		70°F (21°C)
Accuracy Class: Includes non-linearity		± 0.25%, ± 0.5%, ± 1.0% of span (Terminal Point Method includes: hysteresis, non-repeatability, zero offset and span setting errors)
Best Fit Straight Line (BFSL):		±0.2%, ±0.4%, ±0.5% of span Add ± 0.05% for ranges above 5,000 psi
Durability:		> 10 million cycles
Stability:		≤±0.25% span/year at reference conditions
ENVIRONMENTAL SPECIFICATIONS		
Temperature Effects:		-4°F to 185°F (-20°C to 85°C) ±1.0% of span for ±0.25% accuracy class ±2.0% of span for ±0.5% and ±1.0% accuracy class
Temperature Limits:	Storage:	-40°F to 257°F (-40°C to 125°C)
	Operating:	-40°F to 257°F (-40°C to 125°C)
	Compensated:	-4°F to 185°F (-20°C to 85°C)
Humidity Effects:		0-90% RH, non-condensing: no effects 0-100% RH with welded enclosure: no effects
FUNCTIONAL SPECIFICATIONS		
Response Time:		<2ms
Pressure Ranges:		Vacuum, gauge, compound and absolute pressure from 0-5 psi through 0-10,000 psi. (Bar ranges available)
Shock:		100g Peak, 11ms
Random Vibration:		10g RMS, 20-2000Hz
Sweep Vibration:		50-2000Hz, 5g peak
Position Effect:		±0.02% Typical
Overpressure:	Proof:	Burst:
≤300 psi	1.5 X Range	2 X Range
≥500 to ≤10,000 psi	1.2 X Range	1.5 X Range
ELECTRICAL SPECIFICATIONS		
Circuit Protection:		Reverse polarity and mis-wire protected
Insulation Resistance (Circuit Case)		100 MΩ @ 30 Vdc
PHYSICAL SPECIFICATIONS		
Environmental Rating:		IP65, NEMA 7,9 (A2X) IP65 NEMA 4X (A4 (S)), IP66 NEMA 6 (A4(W)) IP65, NEMA 4X (A2(S,Z,Y)), IP67, NEMA 6 (A2(W))

WETTED MATERIAL		
Models	Diaphragm	Process Connection
A2, A4, A2X	316L SS	316L SS

NON-WETTED MATERIAL	
Housing	304 SS

HAZARDOUS AREA CERTIFICATIONS (A2X & A4 only)

A2X:	Explosion Proof-cUL (USL/CNL): Class I, Div 1 & 2, Groups A, B, C and D Class II, Div 1 & 2, Groups E, F and G Flame Proof – ATEX: specify A2X NOTE: For 4-20mA units following approvals also apply: Class I, Div. 1 Class I, Div 2, Non-Incendive refer to Ashcroft drawing #825A022 for wiring and installation requirements
A4:	Intrinsically Safe – FM/CSA Intrinsic Safety: Class I, II and III Div. 1 and 2 Groups A, B, C, D, F and G per entity requirements see Ashcroft drawing #825A022 Non-incendive: Class I, II and III Div. 2, Groups A, B, C, D, F and G, no barriers needed

RoHS COMPLIANT

Distribuidor Autorizado CALFER
CALFER DE MÉXICO®
CONTROLES AUTOMÁTICOS INDUSTRIALES
50 ANIVERSARIO
www.calfer.com.mx 01 800 0125 742 /CalferMx
soporte.tecnico2@calfer.com.mx

ASHCROFT®
Trust the shield.®

ORDERING CODE Example:	A2	S	A	M01	05	F2	50#	G	X6B
Model									
A2 - Industrial pressure transmitter	A2								
A2X - Explosion/flame proof pressure transmitter									
A4 - Intrinsically safe/non-incendive pressure transmitter									
Enclosure									
S - Basic (both A2 & A4)		S							
Z - Zero and span access (only A2)									
Y - Welded with zero & span access (only A2)									
W - Welded w/out zero & span access (both A2 & A4)									
X - A2X Only (not selectable, leave blank in this field)									
Accuracy/Temp. Effects									
A - 0.25%/≤1.0%(-20°C to 85°C)			A						
B - 0.50%/≤2.0%(-20°C to 85°C)									
C - 1.0%/≤2.0%(-20°C to 85°C)									
Pressure Connection									
M01 - 1/8 NPT Male				M01					
M02 - ¼ NPT Male									
F02 - ¼ NPT Female									
MEK - 7/16-20 SAE-Male									
F09 - 9/16-18 (¼)-Female (Aminco®)									
M04 - ½ NPT Male									
F04 - ½ NPT Female									
MG4 - G¼ Male									
VM2 - VCR inlet fitting ¼" VCR gland w/ 9/16-18 male nut									
VF2 - VCR inlet fitting ¼" VCR gland w/ 9/16-18 female nut									
S15 - Sanitary Seal 1½" Tri-Clamp									
S20 - Sanitary Seal 2.0" Tri-Clamp									
Output Signal									
05 - 0-5 Vdc (A2 & A2X only)					05				
10 - 0-10 Vdc (A2 & A2X only)									
15 - 1-5 Vdc (A2 & A2X only)									
16 - 1-6 Vdc (A2 & A2X only)									
42 - 4-20mA									
Electrical Termination									
Integral Cable (Pigtail)									
F2 - 3´ shielded cable (available with A2 enclosure code or S, Z and with A4 enclosure code S)						F2			
P1 - Specify length (available with A2 enclosure code or S, Z and with A4 enclosure code S)									
Hirschmann® Style Form A DIN 43650-A									
DN - W/o mating conn. (available with A2 enclosure code or S, Z and with A4 enclosure code S)									
D0 - With mate, no cable (available with A2 enclosure code or S, Z and with A4 enclosure code S)									
D2 - With mate, 3´ cable (available with A2 enclosure code or S, Z and with A4 enclosure code S)									
D1 - With mate, specify length (available with A2 enclosure code or S, Z and with A4 enclosure code S)									
4-Pin Bendix® Style									
B4 - W/o mating conn. (available with A2 enclosure code or S, Z, W and with A4 enclosure code S W)									
H1 - With mate, no cable (available with A2 enclosure code or S, Z, W and with A4 enclosure code S W)									
L1 - With mate, 3´ cable (available with A2 enclosure code or S, Z, W and with A4 enclosure code S W)									
P2 - With mate, specify length (available with A2 enclosure code or S, Z, W and with A4 enclosure code S W)									
½ NPT-M Conduit Shielded Cable (NEMA Rating not valid for ranges ≤300 psi)									
C1 - 3´ shielded cable (available with enclosure code W, Y and with enclosure code W, only available option for A2X)									
C6 - 15´ shielded cable (available with enclosure code W, Y and with enclosure code W, only available option for A2X)									
C7 - 30´ shielded cable (only available option for A2X)									
P7 - Shielded cable specify length (only available option for A2X)									
½ NPT-M Conduit Flying Leads (NEMA Rating not valid for ranges ≤300 psi)									
C2 - 3´ flying leads (only available option for A2X)									
C5 - 10´ flying leads (only available option for A2X)									
M12 Threaded									
EW - W/o mating conn. (available with A2 enclosure code or S, Z and with A4 enclosure code S)									
E0 - With Male no cable (available with A2 enclosure code or S, Z and with A4 enclosure code S)									
E2 - With Male 3´ cable (available with A2 enclosure code or S, Z and with A4 enclosure code S)									
E1 - With Male (specify length) (available with A2 enclosure code or S, Z and with A4 enclosure code S)									
Pressure Range (see range table on page 116)									
50# - 50 psi							50#		
Measurement Type									
G - Gauge pressure								G	
A - Absolute pressure									
Option (if including an option(s) must include an "X")									X _ _
CL - Non-standard calibration									
K8 - 17-4PH SS sensor material									
6B - Cleaned for oxygen service									6B

Distribuidor Autorizado CALFER
CALFER DE MÉXICO®
CONTROLES AUTOMÁTICOS INDUSTRIALES
50 ANIVERSARIO
www.calfer.com.mx 01 800 0125 742 /CalferMx
soporte.tecnico2@calfer.com.mx

ASHCROFT®
Trust the shield.®

FEATURES

- Numerous ranges, process/electrical connections, and outputs available as standard
- Optional absolute ranges (G3 only)
- All SS wetted parts

GOLD Service

G2
Transducer

G3
Transducer

T2
Transducer

PERFORMANCE SPECIFICATIONS

Reference Temperature:	72°F (22°C)
Accuracy Class (BFSL):	G2, T2: ±0.25% of span G3: ±0.50% of span
Accuracy Total Error Band: (includesthe combined effects of non-linearity Terminal Point Method, hysteresis, non-repeat-ability, temperature and zero offset and span setting errors)	G2, T2: ±1.0% of span -4°F to 185°F (-20°C to +85°C) G2, T2: ±1.5% of span -40°F to 4°F (-40°C to -20°C) & +185°F to 257°F (85°C to +125°C) G3: ±1.5% of span -4°F to 185°F (-20°C to +85°C) G3: ±2.0% of span -40°F to 4°F (-40°C to -20°C) & +185°F to 257°F (85°C to +125°C)
Durability:	G3: > 10 million cycles G2, T2: 50 million cycles
Stability:	≤±0.25% span/year at reference conditions

ENVIRONMENTAL SPECIFICATIONS

Temperature Limits:	
Storage:	-40°F to 257°F (-40°C to +125°C)
Operating:	-40°F to 257°F (-40°C to +125°C)
Compensated:	-40°F to 257°F (-40°C to +125°C)
Humidity Effects:	No performance effects from 0-100% relative humidity

FUNCTIONAL SPECIFICATIONS

Response time:	G2, T2: <1ms G3: <2ms	
Pressure Ranges:	G2, T2: Compound and gauge pressure, 30 to 20,000 psi G3: Vacuum, compound, gauge 5 to 300 psig and absolute 15 to 300 psia	
Shock:	100gs, 6 ms	
Vibration:	Random vibration (20 g) over temperature range (–40°C to 125°C). Exceeds typical MIL. STD. requirements	
Position Effect:	Less than ±0.01% span, typical	
Overpressure G2, T2:	Proof:	Burst:
≤750 psi and below	2 X Range	10 X Range
≥1,000 to ≤5,000 psi	2 X Range	5 X Range
>5,000 psi to ≤7,500 psi	1.2 X Range	5 X Range
≥10,000 to ≤20,000 psi	1.2 X Range	2.4 X Range
Overpressure G3:	Proof:	Burst:
≤200 psi	2 X Range	5 X Range
300 psi	2 X Range	3 X Range

ELECTRICAL SPECIFICATIONS

Output:	Supply Voltage	Supply Current
0-5 Vdc (3 Wire)	9 Vdc to 36 Vdc	5mA
0-10 Vdc (3 Wire)	14 Vdc to 36 Vdc	5mA
1-5 Vdc, 1-6 & 0.5-4.5 Vdc (3 Wire)	9 Vdc to 36 Vdc	4mA
0.5-4.5 Vdc, 3 Wire (Ratiometric)	5 Vdc ±0.5 Vdc	3.5mA
4-20 mA (2 Wire)	9 Vdc to 36 Vdc	
Electrical Terminations:	See page 115 for options	
Circuit Protection:	Reverse polarity and mis-wire protected	
Insulation Resistance (Circuit Case)	100 MΩ @ 30 Vdc	

PHYSICAL SPECIFICATIONS

Environmental Rating:	IP67: Metri-Pack, Shielded cable, Flying leads Deutsch DT & DTM, AMP Superseal and M12 electrical connections IP65: Hirschmann® G, EN 175301-803 Form A & C (DIN 43650 A & C) and Bendix® style 4 pin, PTO 2A-8-4P or similar electrical connections

WETTED MATERIAL

Models	Diaphragm	Process Connection
G2, T2	17-4PH SS	304 SS
G3	316L SS	316L SS

NON-WETTED

Housing	20% Glass Reinforced Nylon, Fire retardant to UL94 V1

RoHS COMPLIANT · CRN REGISTERED · CE · cULus

Distribuidor Autorizado CALFER
CALFER DE MÉXICO®
CONTROLES AUTOMÁTICOS INDUSTRIALES
50 ANIVERSARIO
www.calfer.com.mx 01 800 0125 742 /CalferMx
soporte.tecnico2@calfer.com.mx

ORDERING CODE Example:	G2	7	M01	42	M2	60#	G	XTU
Model								
T27 - T2 Series, 1.0% Total Error Band -20°C/85°C, 1.5%Total Error Band -40°C/-20°C, 85°C/125°C								
G27 - G2 Series, 1.0% Total Error Band -20°C/85°C, 1.5%Total Error Band -40°C/-20°C, 85°C/125°C	G2	7						
G37 - G3 Series, 1.5% Total Error Band -20°C/85°C, 2.0%Total Error Band -40°C/-20°C, 85°C/125°C								
Pressure Connection Size								
M01 - ⅛ NPT Male			M01					
M02 - ¼ NPT Male								
MEK - 7/16 20 SAE #4 Male, not UL reconginzed over 10,000 psi range								
MEV - 9/16-18 SAE #6 Male w/Buna-N® O-ring, not UL recognized over 10,000 psi range								
MS2 - ¼-19 bsp Male, not UL recognized over 10,000 psi range								
MG2- G ¼ B Male								
M38 - ⅜-24 SAE #3 Male w/Buna-N® O-ring (G2 & G3 only)								
M33 - ⅜-24 UNJF3A (w/37° cone seat) (G2 & G3 only)								
M76 - 7/16 -20 UNJF3A (w/37° cone seat) (G2 & G3 only)								
Output Signal								
5 - 0-5 Vdc								
10 - 0-10 Vdc								
15 - 1-5 Vdc								
16 - 1-6 Vdc								
42 - 4-20mA				42				
RM - 0.5-4.5 Vdc Ratio metric to 5 Vdc supply								
45 - 0.5-4.5Vdc Ratio metric to 9-36 Vdc supply (G2 & G3 only)								
Electrical Termination								
EN 175301-803, Form A (DIN 43650 Form A - Mates to Hirschmann® GDM 3009 or similar (T2 only)								
DN - No mating connector								
D0 - W/mating connector, no cable								
D2 - W/mating connector, 3 feet of shielded cable								
EN 175301-803 Form C (DIN 43650, Form C) (G2 & G3 only)								
DC - No mating connector								
N1 - Mating connector, no cable								
N2 - Mating connector, 3 feet of cable								
N3 - Mating connector, 10 feet of cable								
N9 - Mating connector with customer specified length								
M12 - Mates to Hirschmann® 933 172-100 or similar (G2 & G3 only)								
EW - No mating connector								
E0 - W/mating connector, no cable								
E2 - W/mating connector, 3 feet of shielded cable								
E1 - W/mating connector & customer defined cable length								
Circular 4 Pin - Mates to Bendix® PT06A-8-4S-SR or similar (T2 only)								
B4 - No mating connector								
H1 - W/mating connector, no cable								
L1 - W/mating connector, 3 feet of shielded cable								
Pigtail - Shielded cable with PVC jacket and 24 AWG leads								
F2 - W/3 Feet cable length								
F3 - W/10 Feet of cable length								
P1 - Customer specified length								
Metri-Pack® (G2 & G3 only)								
GN - No mating connection								
G2 - Mating connection with 3 feet of cable								
G3 - Mating connection with 10 feet of cable								
G1 - Mating connector with customer specified length								
Hirschmann® G Series (G2 & G3 only)								
HM - No mating connection								
M1 - W/mating connector, no cable								
M2 - Mating connection with 3 feet of cable					M2			
P9 - Mating connector with customer specified length								
Flying Leads (G2 & G3 only)								
W2 - 3 Feet of flying leads								
W9 - Customer specifed length								
Deutsch DT Series DT04-3P (G2 & G3 only)								
DT - Without mating connector								
T2 - W/1m, 3 feet of cable								
T3 - W/3m, 10 feet of cable								
T1 - W/mating connector, customer specified length								
Deutsch DT Series DTM04-3P (G2 & G3 only)								
DS- Without mating connector								
S2 - W/1m, 3 feet of cable								
S3 - W/3m, 10 feet of cable								
S1 - W/mating connector, customer specified length								
AMP Superseal® (G2 & G3 only)								
AP - Without mating connector								
A2 - W/1m, 3 feet of cable								
A3 - W/3m, 10 feet of cable								
A1 - W/mating connector, customer specified length								
Pressure Ranges (see range table on page 116)								
60# - 60 psi						60#		
Measurement Type								
G - Gauge							G	
A - Absolute (G3 only)								
Option (if including an option(s) must include an "X")								X_ _
TU - Throttle Plug								TU
6B - Cleaned for oxygen service								
RH - Traceable 9 point calibration report								

Distribuidor Autorizado CALFER

CALFER DE MÉXICO®
CONTROLES AUTOMÁTICOS INDUSTRIALES

50 ANIVERSARIO

www.calfer.com.mx 01 800 0125 742 /CalferMx

soporte.tecnico2@calfer.com.mx

Standard Pressure Ranges

G2, G3, T2 RANGE TABLE

	Range	Code	G2	T2	G3
Vacuum	0 psi/-14.7 psi	0#&vac			•
Compound	15 psi/-14.7 psi	15#&vac			•
	30 psi/-14.7 psi	30#&vac	•	•	•
	45 psi/-14.7 psi	45#&vac	•	•	•
	60 psi/-14.7 psi	60#&vac	•	•	•
	85 psi/-14.7 psi	85#&vac	•	•	•
	100 psi/-14.7 psi	100#&vac	•	•	•
	150 psi/-14.7 psi	150#&vac	•	•	•
	200 psi/-14.7 psi	200#&vac	•	•	•
	300 psi/-14.7 psi	300#&vac	•	•	•
Positive Pressure	5 psi	5#			•
	15 psi	15#			•
	30 psi	30#	•	•	•
	50 psi	50#	•	•	•
	60 psi	60#	•	•	•
	100 psi	100#	•	•	•
	150 psi	150#	•	•	•
	200 psi	200#	•	•	•
	250 psi	250#	•	•	
	300 psi	300#	•	•	•
	400 psi	400#	•	•	
	500 psi	500#	•	•	
	750 psi	750#	•	•	
	1,000 psi	1000#	•	•	
	1,500 psi	1500#	•	•	
	2,000 psi	2000#	•	•	
	3,000 psi	3000#	•	•	
	5,000 psi	5000#	•	•	
	6,000 psi	6000#	•	•	
	7,500 psi	7500#	•	•	
	10,000 psi	10000#	•	•	
	15,000 psi[1]	15000#	•	•	
	20,000 psi[1]	20000#	•	•	
	bar, kPa, and mPa ranges also available				

[1] Only available with M01, M02, MG2, M76, M03 & M77 process connections

A2, A4, A2X RANGE TABLE

	Range	Code	NOTES
Vacuum	0 psi/-14.7 psi	0#&vac	17-4PH SS sensor not available, gauge pressue only
Compound	15 psi/-14.7 psi	15#&vac	17-4PH SS sensor not available, gauge pressue only
	30 psi/-14.7 psi	30#&vac	17-4PH SS sensor not available, gauge pressue only
	45 psi/-14.7 psi	45#&vac	Gauge pressue only
	60 psi/-14.7 psi	60#&vac	Gauge pressue only
Positive Pressure	1.5 psi	1.5#	17-4PH SS sensor not available, gauge pressue only, available with accuracies B or C only
	5 psi	5#	17-4PH SS sensor not available, gauge pressue only
	10 psi	10#	17-4PH SS sensor not available, gauge pressue only
	15 psi	15#	17-4PH SS sensor not available
	30 psi	30#	17-4PH SS sensor not available
	50 psi	50#	
	60 psi	60#	
	75 psi	75#	
	100 psi	100#	
	150 psi	150#	
	200 psi	200#	
	300 psi	300#	
	500 psi	500#	
	750 psi	750#	
	1,000 psi	1000#	
	1,500 psi	1500#	
	2,000 psi	2000#	
	3,000 psi	3000#	
	5,000 psi	5000#	
	6,000 psi	6000#	
	7,500 psi	7500#	
	10,000 psi	10000#	17-4PH SS sensor required

Distribuidor Autorizado CALFER
CALFER DE MÉXICO®
CONTROLES AUTOMÁTICOS INDUSTRIALES
50 ANIVERSARIO
www.calfer.com.mx 01 800 0125 742 /CalferMx
soporte.tecnico2@calfer.com.mx

ASHCROFT®
Trust the shield.®

FEATURES

- Pressure ranges from vacuum through 20,000 psi
- Choice of ±0.5% or ±1.0% accuracy
- All SS wetted parts

RUSH GOLD Service

K1 Transducer

FM APPROVED

CRN

KS Transducer

3A

KX Transducer

PERFORMANCE SPECIFICATIONS

Reference Temperature:	68°F (20°C)
Accuracy Class (% Span):	±0.5%, ±1.00% of span
	Terminal Point Method: includes non-linearity, hysteresis, non-repeatability, zero offset and span setting errors
Best Fit Straight Line (BFSL):	± 0.25%, ± 0.40% of span. Add ± 0.05% for ranges above 5000 psi
Durability:	> 10 million cycles
Stability:	±0.5% Span/year at reference conditions

ENVIRONMENTAL SPECIFICATIONS

Temperature Limits:			
	Storage:	–65°F to 250°F (–54°C to 121°C)	
	Operating:	–20°F to 180°F (–28°C to 82°C)	
	Compensated:	–20°F to 160°F (–28°C to 71°C)	
Thermal Coefficients: (68°F (20°C) ref.)	**Accuracy:**	**0.5%**	**1%**
	ZERO	±0.028%	±0.04%
	SPAN	±0.028%	±0.04%
	Optional (0.5% Accuracy):		
	ZERO	±0.014%	N/A
	SPAN	±0.014%	N/A
Humidity Effects:	No performance effect at 95% relative humidity-noncondensing		

FUNCTIONAL SPECIFICATIONS

Response Time:	<5ms	
Pressure Ranges:	K1: 15 to 20,000 psig, compound to 60 psig KX: 100 to 5000 psi KS: 30 to 1000 psig, compound to 100 psig	
Shock Effect: (K1 only)	Less than ±0.05% F.S. effect for 100 g's, 20ms shock in any axis	
Vibration Effect: (K1 only)	Less than ±0.1% F.S. effect for 0-2000 Hz at 20 g's in any axis	
Position Effect:	Less than ±0.01% F.S.	
Overpressure:	Proof:	Burst:
≤2,000 psi	2 X Range	8 X Range
≥3,000 to ≤5,000 psi	1.5 X Range	3 X Range
≥7,500 to ≤20,000 psi	1.2 X Range	1.50 X Range

ELECTRICAL SPECIFICATIONS

Circuit Protection:	Reverse polarity and miss-wire protected
Insulation Resistance (Circuit Case)	100 MΩ @ 100 Vdc

PHYSICAL SPECIFICATIONS

Environmental Rating:	NEMA 4X

HAZARDOUS SPECIFICATIONS

(K1 only with XFM option)	Intrinsically Safe – FM/CSA Intrinsic Safety: Class I, II and III Div. 1 Groups A, B, C, D, F and G when used with safety barriers in accordance with Ashcroft drawing 71B212 Sht (1-3). Non-incendive: Class I, II and III Div. 2, Groups A, B, C, D, F and G, no barriers needed

WETTED MATERIAL

Models	Diaphragm	Process Connection
K1	17-4PH SS	304 SS
KS	316L SS	316L SS
KX	316Ti	316

NON-WETTED

Housing	304 SS

Distribuidor Autorizado CALFER
CALFER DE MÉXICO®
CONTROLES AUTOMÁTICOS INDUSTRIALES
50 ANIVERSARIO
www.calfer.com.mx 01 800 0125 742 /CalferMx
soporte.tecnico2@calfer.com.mx

ASHCROFT®
Trust the shield.®

ORDERING CODE Example:	K1	7	M01	42	F2	100#	XCL
Model							
K1 - Pressure transducer	K1						
KX - Flush mount pressure transducer							
KS - Sanitary pressure transducer							
Accuracy/Tem. Effects							
7 - 1.00%/±0.040%/ °F		7					
5 - 0.50%/±0.028%/ °F							
3 - 0.50%/±0.014%/ °F							
Pressure Connection Size							
M01 - ⅛ NPT Male (K1 only)			M01				
M02 - ¼ NPT Male (K1 only)							
F02 - ¼ NPT Female (K1 only)							
MEK - 7/16-20 SAE Male (K1 only)							
F09 - 9/16-18 (¼) Female Aminco® (K1 only)							
M04 - ½ NPT Male (K1 and KX only)							
MG4 - G ½ (KX only)							
RS1 - O-Ring seal (max. 150 psi) (KS only)							
S15 - 1½″ sanitary connection (KS only)							
S20 - 2″ sanitary connection (KS only)							
Output Signal							
42 - 4-20 mA				42			
15 - 1-5 Vdc							
16 - 1-6 Vdc							
11 - 1-11 Vdc							
12 - 0.1-10 Vdc							
Electrical Termination							
F2- 3´ shielded cable Integral Cable (Pigtail)					F2		
HM - W/o mating connection Hirschmann® G series connector (minature type)							
B4 - W/o mating connection 4-Pin Bendix® style							
B6 - W/o mating connection 6-Pin Bendix® style							
B8 - W/o mating connection environmentall sealed/moisture proof 4-Pin Bendix® style							
B9 - W/o mating connection environmentall sealed/moisture proof 6-Pin Bendix® style							
C1 - 3´ shielded cable ½ NPT Male conduit shielded cable							
M1 - Mating connector, no cable (KX only) EN 175301-803 Form A (DIN 43650, Form A)							
M2 - Mating connector, 3´ of cable (KX only)							
Standard Pressure Ranges							
15# - 15 psi (K1)							
30# - 30 psi							
60# - 60 psi							
100# - 100 psi						100#	
150# - 150 psi							
200# - 200 psi							
300# - 300 psi							
500# - 500 psi							
750# - 750 psi							
1000# - 1,000 psi							
2000# - 2,000 psi (K1 and KX only)							
3000# - 3,000 psi (K1 and KX only)							
5000# - 5,000 psi (K1 and KX only)							
7500# - 7,500 psi (K1 only)							
10000# - 10,000 psi (K1 only)							
15000# - 15,000 psi (K1 only) with F09 code process conn.							
20000# - 20,000 psi (K1 only) with F09 code process conn.							
0#&VAC - 0/vac (K1 only)							
15#&VAC - vac/15 psi (K1 only)							
30#&VAC - vac/30 psi (K1 and KX only)							
45#&VAC - vac/45 psi (K1 and KX only)							
60#&VAC - vac/60 psi (K1 and KX only)							
100#&VAC - vac/100 psi (K1 and KX only)							
Option (if including an option(s) must include an "X")							X _ _
CL - Non-standard calibration							CL
FM - FM Approval option (K1 only with 4-20 mA)							

Distribuidor Autorizado CALFER
CALFER DE MÉXICO®
CONTROLES AUTOMÁTICOS INDUSTRIALES
50 ANIVERSARIO
www.calfer.com.mx 01 800 0125 742 /CalferMx
soporte.tecnico2@calfer.com.mx

K2, K8 Pressure Transducers

ASHCROFT®
Trust the shield.®

FEATURES

- Choice of ±0.50% or ±1.0% accuracy
- All SS wetted parts

K2
Transducer

K8
Transducer

PERFORMANCE SPECIFICATIONS

Reference Temperature:	68°F (20°C)
Accuracy Class:	±0.50% or ±1.00% of span (Terminal Point Method) includes non-linearity, hysteresis, non-repeatability, zero offset and span setting error
Best Fit Straight Line (BFSL):	±0.25% or ±0.40% of span
Durability:	<10 million cycles
Stability:	±0.5% span/year

ENVIRONMENTAL SPECIFICATIONS

Temperature Limits:	
Storage:	–65°F to 250°F (–54°C to 121°C)
Operating:	–20°F to 180°F (–28°C to 82°C)
Compensated:	–20°F to 160°F (–28°C to 71°C)
Thermal Coefficients: 68°F (20°C) Ref.	**Accuracy Class: 0.5% 1.0%** ZERO ±0.028% ±0.04% SPAN ±0.028% ±0.04% **Optional: (0.5% Accuracy Class Only)** ZERO ±0.014% N/A SPAN ±0.014% N/A
Humidity Effects:	No performance effect at 95% relative humidity non-condensing

FUNCTIONAL SPECIFICATIONS

Response Time:	<5ms	
Pressure Ranges:	K8 & K2: Vac to 20,000 psi	
Shock Effect:	Less than ±0.05% F.S. effect for 100 g's, 20ms shock in any axis	
Vibration Effect:	Less than ±0.1% F.S. effect for 0-2000 Hz at 20 g's in any axis	
Position Effect:	Less than ±0.01% F.S.	
Overpressure:	Proof:	Burst:
≤2,000 psi	2 X Range	8 X Range
≥3,000 to ≤5,000 psi	1.5 X Range	3 X Range
≥7,500 to ≤20,000 psi	1.2 X Range	1.5 X Range

ELECTRICAL SPECIFICATIONS

Circuit Protection:	Reverse polarity and mis-wire protected
Insulation Resistance (Circuit Case):	100MΩ @ 100Vdc

PHYSICAL SPECIFICATIONS

Environmental Rating:	K2 (only): NEMA 4X

WETTED MATERIALS

Models	Diaphragm	Process Connection
K2, K8	17-4PH SS	304 SS

NON-WETTED MATERIALS

Case Material:	304 SS

Distribuidor Autorizado CALFER
CALFER DE MÉXICO®
CONTROLES AUTOMÁTICOS INDUSTRIALES
50 ANIVERSARIO
www.calfer.com.mx 01 800 0125 742 /CalferMx
soporte.tecnico2@calfer.com.mx

ORDERING CODE Example:	K2	7	M01	10	F2	100#	XCL
Model							
K8 - Pressure sensor							
K2 - Millivolt output pressure transducer	K2						
Accuracy/Temp. Effects							
7 - 1.00%/±0.040%/ °F		7					
5 - 0.50%/±0.028%/ °F							
3 - 0.50%/±0.014%/ °F							
Pressure Connection Size							
M01 - ⅛ NPT Male			M01				
M02 - ¼ NPT Male							
F02 - ¼ NPT Female							
M04 - ½ NPT Male							
MEK - 7/16-20 SAE Male							
F09 - 9/16-18 (¼) Female Aminco®							
Output Signal							
MV - mV/V (K8 only)							
02 - 2mV/V (K2 only)							
03 - 3mV/V (K2 only)							
10 - 10mV/V (K2 only)				10			
20 - 20mV/V (K2 only)							
Electrical Termination							
F2- 3´ shielded cable, integral cable (Pigtail)					F2		
HM - W/o mating connection, Hirschmann® G series connector (minature type)							
B4 - W/o mating connection, 4-Pin Bendix® style							
B6 - W/o mating connection, 6-Pin Bendix® style							
B8 - W/o mating connection, environmental sealed/moisture proof 4-Pin Bendix style							
B9 - W/o mating connection, environmental sealed/moisture proof 6-Pin Bendix style							
C1 - 3´ shielded cable, ½ NPT Male conduit shielded cable							
Ranges							
15# - 15 psi							
30# - 30 psi							
60# - 60 psi							
100# - 100 psi						100#	
150# - 150 psi							
200# - 200 psi							
300# - 300 psi							
500# - 500 psi							
750# - 750 psi							
1000# - 1,000 psi							
2000# - 2,000 psi							
3000# - 3,000 psi							
5000# - 5,000 psi							
7500# - 7,500 psi							
10000# - 10,000 psi							
15000# - 15,000 psi							
20000# - 20,000 psi							
20000# - 20,000 psi							
0#&VAC - 0/vac							
15#&VAC - vac/15 psi							
30#&VAC - vac/30 psi							
45#&VAC - vac/45 psi							
60#&VAC - vac/60 psi							
100#&VAC - vac/100 psi							
Option (if including an option(s) must include an "X")							X _ _
CL - Non-standard calibration							CL

Distribuidor Autorizado CALFER
CALFER DE MÉXICO®
CONTROLES AUTOMÁTICOS INDUSTRIALES
50 ANIVERSARIO
www.calfer.com.mx 01 800 0125 742 /CalferMx
soporte.tecnico2@calfer.com.mx

GC35 Pressure Transducer

ASHCROFT®
Trust the shield.®

FEATURES

- High over-pressure capability
- All SS wetted materials
- Simple “Push-Button” configurability allows user to adjust switch settings, analog scaling
- Rugged aluminum housing

GC35
Transducers

PERFORMANCE SPECIFICATIONS

Reference Temperature:	74°F (23°C)
Analog Output:	(4-20mA)
Accuracy:	±1.0% of span (Accuracy includes the effects of linearity, hysteresis, repeatability, zero offset and span setting errors) (URL)
Response Time:	30 ms-10sec (selectable)
Output Resolution:	±0.05% of span
Analog Scaling:	User may configure analog output scaling to any range within –100% to +150% Full Scale of the sensor range
Pressure Switch Output:	
Type:	NPN or PNP (open collector up to 80mA)
Setting Accuracy:	±1.0% of span (URL)
Response Time:	5 ms-10.0 sec (by user)
Hysteresis:	Variable deadband (by user)
Switch Setting:	User may adjust switch actuation and dead-band to any points within Full Scale sensor range
Switch Contacts:	User selectable NPN or PNP open collector outputs NPN Type: 30 Vdc / 80 mA (max) PNP Type: Supply Voltage 80 mA (max) Voltage Drop: 1 Vdc (max)
Displays:	
Type:	4 digit, 8 mm LED
Accuracy:	±1.0% span (URL) + last digit
Display Update Rate:	200 ms-10.0 sec (selectable)
Display Setting:	User may re-configure display scaling, set to capture MIN or MAX value and adjust display update rate

ENVIRONMENTAL SPECIFICATIONS

Temperature Limits:	
Storage:	-20°F to 70°F (-4°C to 158°C)
Operating:	-20°F to 70°F (-4°C to 158°C)
Compensated:	-20°F to 70°F (-4°C to 158°C)
Temperature Effects:	
Zero/Span:	±0.1% of span/°C (from 23°C reference temp.)
Humidity:	0-85% RH (Ranges 150 psi & below) 0-100% RH (Ranges 300 psi & above)

FUNCTIONAL SPECIFICATIONS

Overpressure:	Proof:	Burst:
≤1,500 psi	4 X Range (URL)	10 X Range (URL)
>1,500 psi to ≤3,000 psi	2.5 X Range (URL)	5 X Range (URL)
≤5,000 psi	2.5 X Range (URL)	3 X Range (URL)
Withstand Voltage:	350 Vac 1 minute	
Insulation Voltage:	50 Vdc 100 MV min	
Stability:	±0.25% of span/year	

ELECTRICAL SPECIFICATIONS

Power Supply Requirements:	
Supply Voltage:	16-36 Vdc (with analog output option) 11-36 Vdc (switch output version only)
Current Consumption:	50 mA dc max

PHYSICAL SPECIFICATIONS

Pressure Connection:	¼ NPT Male
Connection Location:	Lower, back
Enclosure:	Nickel plated aluminum
Environmental Rating:	IP65 (ranges 150 psi and below); IP67 (ranges 300 psi and above)
Electrical Connection:	M12 connector (4 pin)

WETTED MATERIALS

Model	Diaphragm	Pressure Connection
GC35	17-4PH SS	316 SS

CE RoHS COMPLIANT

Distribuidor Autorizado CALFER
CALFER DE MÉXICO®
CONTROLES AUTOMÁTICOS INDUSTRIALES
50 ANIVERSARIO
www.calfer.com.mx 01 800 0125 742 /CalferMx
soporte.tecnico2@calfer.com.mx

ORDERING CODE Example:	GC35	7	M02L	41	EW	50#	XRH
Model							
GC35 - Indicating pressure transmitter w/switch output	GC35						
Accuracy							
7 - ±1.0%		7					
Conneciton/Location Size							
M02L - ¼ NPT Male w/ lower connect			M02L				
M02B - ¼ NPT Male w/ back connect							
Output Signal							
41 - 4-20mA & 1X switch				41			
N2 - 2X switch (no 4-20mA)							
Electrical Connection							
EW - M12 Type (4 pin)					EW		
Ranges							
50# - 0-50 psig						50#	
100# - 0-100 psig							
160# - 0-160 psig							
300# - 0-300 psig							
500# - 0-500 psig							
1000# - 0-1,000 psig							
1500# - 0-1,500 psig							
3000# - 0-3,000 psig							
5000# - 0-5,000 psig							
7500# - 0-7,500 psig							
Compound							
75#&V - Vac. to 75 psig							
150#&V - Vac. to 150 psig							
300#&V - Vac. to 300 psig							
Option (if including an option(s) must include an "X")							X _ _
RH - Traceable 9 Point calibration report							RH

Distribuidor Autorizado CALFER
CALFER DE MÉXICO®
CONTROLES AUTOMÁTICOS INDUSTRIALES
50 ANIVERSARIO
www.calfer.com.mx 01 800 0125 742 /CalferMx
soporte.tecnico2@calfer.com.mx

GC51 Pressure Transmitter

ASHCROFT®
Trust the shield.®

FEATURES

- Robust NEMA 4X (IP65) aluminum die cast housing
- Bright backlit 4-digit LCD display
- 2-wire 4-20mA output
- Scaling function allows display to indicate user defined physical units
- "Loop Check" function allows unit to output 4-20mA without applying pressure

GC51
Pressure Transducer

PERFORMANCE SPECIFICATIONS		
Reference Temperature:	73°F (23°C)	
Accuracy:	±0.25% of span (URL) (Accuracy includes the effects of linearity, hysteresis, and repeatability)	
Stability:	±0.25% of span (URL)/year	
Output Resolution:	0.1% of span (URL)	
ENVIRONMENTAL SPECIFICATIONS		
Temperature Effects:	14°F to 140°F (–10°C to 60°C) ±0.02% FS (URL)/°C	
Temperature Limits:		
Storage:	–4°F to 158°F (–20°C to 70°C)	
Operating:	14°F to 140°F (–10°C to 60°C)	
Compensated:	14°F to 140°F (–10°C to 60°C)	
FUNCTIONAL SPECIFICATIONS		
Response Time:	30 ms (user adjustable)	
Vibration:	5 g's 150 Hz	
Shock Effect:	10 g's 16 ms	
Overpressure:	Proof:	Burst:
≤1,500 psi	2 X Range	5 X Range
3,000 & 5,000 psi	1.5 X Range	3 X Range
7,500 psi	1.2 X Range	1.5 X Range
ELECTRICAL SPECIFICATIONS		
Output Signal:	4-20 mA (2 Wire)	
Supply Voltage:	12-32 Vdc	
Rangeablility/Adjustment:	Zero –10% to +110% span Span –10% to +110% span (Accuracy and output resolution based upon full scale (URL) value)	
Insulation Resistance:	50 Vdc (>100 MΩ)	
PHYSICAL SPECIFICATIONS		
Enclosure:	Aluminum	
Environmental Rating:	IP66/NEMA 4	
Mounting:	Mounting bracket included	
WETTED MATERIALS		
Model	Diaphragm	Process Connection
GC51	17-4PH SS	316 SS

Distribuidor Autorizado CALFER
CALFER DE MÉXICO®
CONTROLES AUTOMÁTICOS INDUSTRIALES
50 ANIVERSARIO
www.calfer.com.mx 01 800 0125 742 /CalferMx
soporte.tecnico2@calfer.com.mx

ASHCROFT®
Trust the shield.®

ORDERING CODE Example:	GC51	7	F02	42	CG	15#&VACG	XRH
Model							
GC51 - Rangeable pressure transmitter	GC51						
Accuracy							
7 - ±0.25% of span		7					
Pressure Fitting							
F02 - ¼ NPT Female			F02				
Output Signal							
42 - 4-20 mA Output signal				42			
Electrical Connection							
CG - Cable gland					CG		
CD - ½ NPT Female conduit							
Pressure Range							
Compound							
15#&VACG - Vac-15 psi						15#&VACG	
30#&VACG - Vac-30 psi							
50#&VACG - Vac-50 psi							
Gauge							
50#G - 0-50 psi							
100#G - 0-100 psi							
150#G - 0-150 psi							
300#G - 0-300 psi							
500#G - 0-500 psi							
1000#G - 0-1,000 psi							
1500#G - 0-1,500 psi							
3000#G - 0-3,000 psi							
5000#G - 0-5,000 psi							
7500#G - 0-7,500 psi							
Option (if including an option(s) must include an "X")							X _ _
RH - 9 pt. NIST traceable calibration certificate							RH
6B - Cleaned for oxygen service							

Distribuidor Autorizado CALFER
CALFER DE MÉXICO®
CONTROLES AUTOMÁTICOS INDUSTRIALES
50 ANIVERSARIO
www.calfer.com.mx 01 800 0125 742 /CalferMx
soporte.tecnico2@calfer.com.mx

GC31 Utra-Compact Digital Transducer

ASHCROFT®
Trust the shield.®

FEATURES

- Ultra-compact design 1.2″ x 1.2″ (30mm x 30mm)
- Combination of digital pressure gauge, switch and transducer
- Simple “push-button” configurability allows user to adjust switch settings, analog scaling
- Numerous standard ranges available

GC31
Pressure Transducer

GC31
Panel Mount Pressure Transducer

PERFORMANCE SPECIFICATIONS

Reference Temperature:	73°F (23°C)
Analog Output:	1-5 Vdc
Accuracy:	±1.0% of span; (accuracy linearity, hysteresis and repeatability) (URL)
Response Time:	50 ms
Output Resolution:	25 mV
Analog Scaling:	User may configure analog output scaling to any range within full scale of sensor range
Pressure Switch Output:	
Type	NPN or PNP open collector up to 30Vdc/80mA
Setting Accuracy:	±1.0% of span (URL)
Number of Contacts:	2
Time Delay:	5 ms-2 sec (selectable)
Hysteresis:	Variable deadband (by user)
Switch Setting:	User may adjust switch actuation and dead-band to any points within full scale sensor range
Display:	
Type:	3½ digit, 10 mm LED
Accuracy:	±1.0% of span + last digit (URL)
Display Setting:	User may re-configure display scaling, set to capture MIN or MAX value, and adjust display update rate

ENVIRONMENTAL SPECIFICATIONS

Temperature Limits	
Storage:	–22°F to 140°F (–30°C to 60°C)
Operating:	–4°F to 140°F (–20°C to 60°C)
Compensated:	–14°F to 122°F (–10°C to 50°C)
Temperature Effects:	Zero/Span: ±0.03% span/F (±0.05% F.S./C) (from 73°F/23°C reference temperature)

FUNCTIONAL SPECIFICATIONS

Overpressure:	Proof:	Burst:
≤500 psi	2 X Range (URL)	8 X Range (URL)
≥1,000 psi	1.5 X Range (URL)	2 X Range (URL)

ELECTRICAL SPECIFICATIONS

Power Supply Requirements:	
Supply Voltage:	11-27 Vdc
Current Consumption:	30mA (max.)
Switch Contacts:	(2) NPN or PNP open collector outputs
NPN Type:	30 Vdc / 80 mA (max.)
PNP Type:	Voltage drop 1 Vdc (max)/80mA (max)

PHYSICAL SPECIFICATIONS

Pressure Connection:	4 mm barb
Enclosure:	ABS, polycarbonate, aluminum
Environmental Rating:	IP40
Weight:	Approx. 75 grams
Mounting:	Panel mounting bracket included

WETTED MATERIALS

Model:	Diaphragm	Process Connection
GC31	17-4PH SS	304 SS

CE RoHS COMPLIANT

Distribuidor Autorizado CALFER
CALFER DE MÉXICO®
CONTROLES AUTOMÁTICOS INDUSTRIALES
50 ANIVERSARIO
www.calfer.com.mx 01 800 0125 742 /CalferMx
soporte.tecnico2@calfer.com.mx

ORDERING CODE Example:	GC31	7	M02B	1N	F4	15#&V	XRH
Model							
GC31 - Ultra-compact digital pressure transducer	GC31						
Accuracy							
7 - ±1.0% of span		7					
Pressure Connection							
M02L - ¼ NPT Male w/ lower connect							
M02B - ¼ MNPT Male w/ back connect			M02B				
Output Signal							
1N - 1-5 Vdc: Analog w/2X NPN Type switches				1N			
1P - 1-5 Vdc: Analog w/2X PNP Type switches							
Electrical Connection							
F4 - 6´ (2m) Cable					F4		
Pressure Range							
Compound							
15#&V - Vac-15 psig						15#&V	
75#&V - Vac-75 psig							
150#&V - Vac-150 psig							
300#&V - Vac-300 psig							
Gauge GC31							
50#G - 0-50 psig							
100#G - 0-100 psig							
150#G - 0-150 psig							
300#G - 0-300 psig							
500#G - 0-500 psig							
1000#G - 0-1,000 psig							
1500#G - 0-1,500 psig							
Option (if including an option(s) must include an "X")							X _ _
RH - Traceable 9 point calibration report							RH

DIFFERENTIAL TRANSDUCERS

GC55 128
GC52 129-130
GC30 131-132
GL42 133-134
RXLdp, XLdp, IXLdp 135-136
CXLdp 137-138
DXLdp 139-140

GC55 Pressure Transducer

ASHCROFT®
Trust the shield.®

FEATURES

- Robust aluminum die cast housing
- Bright LED display of pressure and switch status
- All SS wetted parts
- 4-20 mA output signal or 1-5 Vdc output signal
- Internal "Push-button" configurability allows quick user pressure range changes or relay adjustments

GC55
Transducer

PERFORMANCE SPECIFICATIONS

Reference Temperature	75°F (24°C)
Analog Output:	(4-20 mA or 1-5 Vdc)
Accuracy:	±0.5% of span (includes Linearity, Hysteresis and Repeatability)
Response Time:	20 ms
Output Resolution:	±0.2% of span
Stability:	±0.5%/yr
Pressure Switch Output:	
Number of Contacts:	2
Response Time:	20 ms-2.0 sec (by user)
Type:	TTL/CMOS up to 40Vdc/200mA
Setting Accuracy:	±1.0% of span
Hysteresis:	Variable deadband (by user)
Display:	
Accuracy:	±1.0% of span
Type:	3.5 digits

ENVIRONMENTAL SPECIFICATIONS

Temperature Limits:	Storage: –4°F to 140°F (–20°C to 60°C) Operating: 14°F to 122°F (–10°C to 50°C) Compensated: 14°F to 122°F (–10°C to 50°C)
Thermal Coefficients:	Zero & Span: ±0.05% of span/°C (from 75°F/24°C reference temperature)

FUNCTIONAL SPECIFICATIONS

Static (Line) Pressure		
Pressure Range:	Proof:	Burst:
75 to ≤300 psi	2 X Range (URL)	10 X Range (URL)
Single Side (Differential)		
Pressure Range:	Proof:	Burst:
75 to ≤300 psi	2 X Range (URL)	10 X Range (URL)

ELECTRICAL SPECIFICATIONS

Output:	Output Signal	Supply Voltage	Supply Current
	4-20mA (3 wire)	15-27Vdc	80mA
	1-5Vdc (3Wire)	11-27Vdc	80mA

PHYSICAL SPECIFICATIONS

Enclosure:	Aluminum
Environmental Rating:	IP66
Mounting:	(2) 5.2 mm mounting holes

WETTED MATERIALS

Model	Diaphragm	Pressure Connection
GC55	17-4PH SS	304 SS

ORDERING CODE

Example:	GC55	7	F01	15	CG	75#	XRH
Model							
GC55 - Wet/wet indicating differential pressure transducer w/switch outputs	GC55						
Accuracy							
7 - ± 0.5% of span		7					
Pressure Connection							
F01 - ⅛ NPT Female			F01				
Output Signal							
15 - 1-5 Vdc				15			
42 - 4-20 mA							
Electrical Connection							
CG - Cable gland					CG		
CD - ½ FNPT Conduit							
Pressure Range Differential							
75# - 75 psid						75#	
100# - 100 psid							
150# - 150 psid							
250# - 250 psid							
300# - 300 psid							
Option (if including an option(s) must include an "X")							X_ _
RH - 9 pt. NIST traceable calibration certificate							RH

Distribuidc
CALFER DE MÉXICO®
CONTROLES AUTOMÁTICOS INDUSTRIALES
50 ANIVERSARIO
www.calfer.com.mx 01 800 0125 742 /CalferMx
soporte.tecnico2@calfer.com.mx

GC52 Differential Pressure Transmitter

ASHCROFT®
Trust the shield.®

FEATURES

- Robust NEMA 4X (IP65) aluminum die cast housing
- Bright backlit 4-digit LCD display
- 2-wire 4-20mA output
- Scaling function allows display to indicate user defined physical units
- "Loop Check" function allows unit to output 4-20mA without applying pressure

GC52
Differential Pressure Transducer

PERFORMANCE SPECIFICATIONS		
Reference Temperature:	73°F (23°C)	
Accuracy:	±0.5% of span (URL) (Accuracy includes the effects of linearity, hysteresis, and repeatability)	
Stability:	±0.25% of span (URL)/year	
Output Resolution:	0.1% of span (URL)	
ENVIRONMENTAL SPECIFICATIONS		
Temperature Effects:	(–10°C to 60°C) ±0.03% FS/C°	
Temperature Limits:		
Storage:	5°F to 150°F (–15°C to 65°C)	
Operating:	14°F to 140°F (–10°C to 60°C)	
Compensated:	14°F to 140°F (–10°C to 60°C)	
FUNCTIONAL SPECIFICATIONS		
Response Time:	100 ms (user adjustable)	
Vibration:	5 g's 150 Hz	
Shock Effect:	10 g's 16 ms	
Static (Line) Pressure		
Pressure Range:	Proof:	Burst:
4 IWC to ≤400 IWC	300 psi	800 psi
Single Side (Differential)		
Pressure Range:	Proof:	Burst:
≤8 IWC, ±4 IWC	30 psid	130 psid
≥20 IWC, ±8 IWC	100 psid	130 psid
Static (Line) Pressure Effects Pressure Range:		
≥20 IWC, ±8 IWC	±0.3% Range/100 psi (URL)	
8 IWC, ±4 IWC	±0.7% Range/100 psi (URL)	
4 IWC	±1.5% Range/100 psi (URL)	
ELECTRICAL SPECIFICATIONS		
Output Signal:	4-20 mA (2 Wire)	
Supply Voltage:	12-32 Vdc	
Rangeablility/Adjustment:	Zero –10% to 110% Span Span –10% to 110% Span (Accuracy and output resolution based upon full scale (URL) value)	
Insulation Resistance:	50 Vdc (>100 MΩ)	
PHYSICAL SPECIFICATIONS		
Enclosure:	Aluminum	
Environmental Rating:	IP66/NEMA 4	
Mounting:	Mounting bracket included	

WETTED MATERIALS		
Model	Diaphragm	Process Connection
GC52	316 SS, Viton® & Alumina Ceramic	316 SS

Distribuidor Autorizado CALFER
CALFER DE MÉXICO®
CONTROLES AUTOMÁTICOS INDUSTRIALES
50 ANIVERSARIO
www.calfer.com.mx 01 800 0125 742 /CalferMx
soporte.tecnico2@calfer.com.mx

ORDERING CODE Example:	GC52	7	F02	42	CG	4 IWL	XRH
Model							
GC52 - Rangeable wet/wet differential pressure transmitter	GC52						
Accuracy							
7 - ±0.50% of span		7					
Pressure Fitting							
F02 - ¼ NPT Female			F02				
Output Signal							
42 - 4-20 mA Output signal				42			
Electrical Connection							
CG - Cable gland					CG		
CD - ½ NPT Female conduit							
Pressure Range							
Bidirectional							
4IWL - ±4 IWD						4 IWL	
8IWL - ±8 IWD							
20IWL - ±20 IWD							
40IWL - ±40 IWD							
80IWL - ±80 IWD							
200IWL - ±200 IWD							
Differential							
4IW - 0-4 IWD							
8IW - 0-8 IWD							
20IW - 0-20 IWD							
40IW - 0-40 IWD							
80IW - 0-80 IWD							
200IW - 0-200 IWD							
400IW - 0-400 IWD							
Option (if including an option(s) must include an "X")							X _ _
RH - 9 pt. NIST traceable calibration certificate (both)							RH

GC30 Ultra-Compact Differential Digital Transducer

ASHCROFT®
Trust the shield.®

FEATURES

- Ultra-compact design 1.2″ x 1.2″ (30 mm x 30 mm)
- Combination of digital pressure gauge, switch and transducer
- Simple “push-button” configurability allows user to adjust switch settings, analog scaling
- Numerous standard ranges available

GC30
Differential Pressure Transducer

GC30
Panel Mount
Differential Pressure Transducer

PERFORMANCE SPECIFICATIONS

Reference Temperature:	73°F (23°C)
Analog Output:	1-5 Vdc
Accuracy:	±1.5% of span (accuracy linearity, hysteresis and repeatability) (URL)
Response Time:	50 ms
Output Resolution:	25 mV
Analog Scaling:	User may configure analog output scaling to any range within full scale of sensor range
Pressure Switch Output:	
Type:	NPN or PNP open collector up to 30Vdc/80mA
Setting Accuracy:	±1.5% of span (URL)
Number of Contacts:	2
Time Delay:	5 ms-2 sec (selectable)
Hysteresis:	Variable deadband (by user)
Switch Setting:	User may adjust switch actuation and dead-band to any points within full scale sensor range
Display:	
Type:	3½ digit, 10 mm LED
Accuracy:	±1.5% of span + last digit (URL)
Display Setting:	User may re-configure display scaling, set to capture MIN or MAX value, and adjust display update rate

ENVIRONMENTAL SPECIFICATIONS

Temperature Limits:	
Storage:	–22°F to 140°F (–30°C to 60°C)
Operating:	–4°F to 140°F (–20°C to 60°C)
Compensated:	–14°F to 122°F (–10°C to 50°C)
Thermal Coefficients:	Zero/Span: (from 73°F/23°C reference temperature) ±0.09%/°F (±0.15%/°C) ±2.5 IWC, 0/2.5 IWC and below ±0.06%/°F (±0.10%/°C) ±5.0 IWC, 0/5.0 IWC and above

FUNCTIONAL SPECIFICATIONS

Max Static (Line) Pressure:	Proof:	Burst:
7.5 psi (50 kPa)	7.5 psid (50 kPa)	25 psid (170 kPa)

ELECTRICAL SPECIFICATIONS

Power Supply Requirements:	
Supply Voltage:	11-27 Vdc
Current Consumption:	30 mA (max)
Switch Contacts:	(2) NPN or PNP open collector outputs
NPN Type:	30 Vdc / 80 mA (max)
PNP Type:	Voltage drop 1 Vdc (max)/80mA (max)

PHYSICAL SPECIFICATIONS

Pressure Connection:	4 mm barb
Enclosure:	ABS, polycarbonate, aluminum
Environmental Rating:	IP40
Weight:	Approx. 75 grams
Mounting:	Panel mounting bracket included

WETTED MATERIALS

Models:	Media
GC30	Clean, dry air/gas compatible with Aluminum, Titanium, ABS, Ceramic, Silicon, & Silicone RTV NOT FOR USE ON LIQUIDS

CE RoHS COMPLIANT

Distribuidor Autorizado CALFER
CALFER DE MÉXICO®
CONTROLES AUTOMÁTICOS INDUSTRIALES
50 ANIVERSARIO
www.calfer.com.mx 01 800 0125 742 /CalferMx
soporte.tecnico2@calfer.com.mx

ORDERING CODE Example:	GC30	9	M5B	1N	F4	P25IWL	XRH
Model							
GC30 - Ultra-compact digital differential pressure sensor	GC30						
Accuracy							
9 - ±1.5% of span		9					
Pressure Connection							
M5B - 4mm ID Barb			M5B				
Output Signal -							
1N - 1-5 Vdc: Analog w/2X NPN Type switches				1N			
1P - 1-5 Vdc: Analog w/2X PNP Type switches							
Electrical Connection							
F4 - 6´ (2m) Cable					F4		
Pressure Range							
Bidirectional							
P25IWL - ±0.25 IWD						P25IWL	
P5IWL - ±0.5 IWD							
1IWL - ±1.0 IWD							
2IWL - ±2 IWD							
5IWL - ±5 IWD							
10IWL - ±10 IWD							
25IWL - ±25 IWD							
Differential							
P25IW - 0.25 IWD							
P5IW - 0.5 IWD							
1IW - 1.0 IWD							
2IW - 2 IWD							
5IW - 5 IWD							
10IW - 10 IWD							
25IW - 25 IWD							
Option (if including an option(s) must include an "X")							X _ _
RH - Traceable 9 Point Calibration Report							RH

Distribuidor Autorizado CALFER
CALFER DE MÉXICO®
CONTROLES AUTOMÁTICOS INDUSTRIALES
50 ANIVERSARIO
www.calfer.com.mx 01 800 0125 742 /CalferMx
soporte.tecnico2@calfer.com.mx

GL42 Low Differential Indicating Pressure Transmitter

ASHCROFT®
Trust the shield.®

FEATURES

- Excellent long term stability
- Four digit LCD display
- Field-selectable units (IWC, Pa, mbar)
- 4-20 mA (2-wire output)
- Adjustable display response time: 250 ms, 1 sec, 3 sec or 5 sec

PERFORMANCE SPECIFICATIONS	
Reference Temperature:	77°F (25°C)
Accuracy Class (of Span):	±0.5%, (±1.00% Accuracy includes non-linearity (Terminal Point Method), hysteresis, non-repeatability, zero offset and span setting errors)
Repeatability:	≤ 0.1% F.S.
Stability:	±0.5% of span/year
Standard Response Time:	250 ms
ENVIRONMENTAL SPECIFICATION	
Enclosure Rating:	IP65
Temperature Limits:	
Storage:	-40°F to 194°F (-40°C to 90°C)
Operating:	-4°F to 158°F (-20°C to 70°C)
Compensated Range:	+35°F to 129°F (2°C to 54°C) (10-90% R.H. Noncondensing)
Thermal Coefficients:	Zero & Span; ±0.06% of span/°C (From 77°F/25°C Reference temperature within 35°F to 129°F (2°C to 54°C)
FUNCTIONAL SPECIFICATIONS	
Max. Static Line Pressure: 25 psi	Proof: 15 psid / Burst: 25 psid
ELECTRICAL SPECIFICATION	
Output Signal:	4-20 mA
Supply Voltage:	19-36 Vdc (Nominal 24 Vdc)
Zero and Span Potentiometers:	Zero: ±5% F.S. / Span: ±5% F.S.
PHYSICAL SPECIFICATIONS	
Electrical Connection:	½″ Female DIN cable conduit (STD.) or (OPT.) PG9 cable gland
Mounting:	Wall mount (STD.) Panel mount, DIN rail (OPT.)
MATERIAL SPECIFICATIONS	
Enclosure:	Nylon
Cable Connection Socket:	Nylon
Front Foil:	Polyester
Weight:	9.9 oz.
WETTED MATERIALS	
Model:	Media:
GL42	Clean, dry air/gases compatible with Aluminum, Titanium, ABS, Ceramic, Silicon & Silicone RTV NOT FOR USE ON LIQUIDS

GL42
Transmitter

CE RoHS COMPLIANT

Distribuidor Autorizado CALFER
CALFER DE MÉXICO®
CONTROLES AUTOMÁTICOS INDUSTRIALES
50 ANIVERSARIO
www.calfer.com.mx 01 800 0125 742 /CalferMx
soporte.tecnico2@calfer.com.mx

ORDERING CODE Example:	GL425	MB2	42	CD	W	25IW	XRH
Model & Accuracy							
GL425 - ±0.50% Accuracy of span, ±0.06% Span T.C. /°K	GL425						
GL427 - ±1.00% Accuracy of span, ±0.06% Span T.C. /°K							
Pressure Connection							
F01 - ⅛ NPT Female							
MB2 - ¼ Male barbed		MB2					
Output Signal							
Supply Voltage:							
42 - 4-20mA, 19-36 Vdc (nominal 24 Vdc)			42				
Electrical Termination							
CD - Conduit				CD			
CG - Cable gland							
Mounting							
W - Wall					W		
D - Din rail							
Pressure Range							
Unidirectional Ranges (differential)							
P1IW - 0.10 IWD							
P25IW - 0.25 IWD							
P5IW - 0.50 IWD							
P75IW - 0.75 IWD							
1IW - 1.00 IWD							
2IW - 2.00 IWD							
2P5IW - 2.50 IWD							
3IW - 3.00 IWD							
5IW - 5.00 IWD							
10IW - 10.00 IWD							
15IW - 15.00 IWD							
25IW - 25.00 IWD						25IW	
Bi-directional Ranges							
P1IWL - ±0.10 IWD							
P25IWL - ±0.25 IWD							
P5IWL - ±0.50 IWD							
P75IWL - ±0.75 IWD							
1IWL - ±1.00 IWD							
2IWL - ±2.00 IWD							
5IWL - ±5.00 IWD							
10IWL - ±10.00 IWD							
15IWL - ±15.00 IWD							
Option (if including an option(s) must include an "X")							X _ _
HK - Panel mount option (only provided when ordered with 'W' wall mount version.)							
NH - SS Tag							
RH - 9 pt. NIST traceable calibration report							RH

Distribuidor Autorizado CALFER
CALFER DE MÉXICO®
CONTROLES AUTOMÁTICOS INDUSTRIALES
50 ANIVERSARIO
www.calfer.com.mx 01 800 0125 742 /CalferMx
soporte.tecnico2@calfer.com.mx

RXLdp, XLdp, IXLdp Pressure Transmitters

ASHCROFT®
Trust the shield.®

FEATURES

- High overpressure protection
- Very low pressure range availability, down to 0-0.1 IWC
- Current and voltage output signals available
- Custom ranges available
- On board voltage regulation allows use of low cost unregulated power supply

RXLdp
Transducer

XLdp
Transducer

IXLdp
Transducer

FM APPROVED

PERFORMANCE SPECIFICATIONS

Reference Temperature:	70°F (21°C)
Accuracy:	XL/IXL: ±0.25% of span, ±0.5% of span, RXL: ±1.0% of span (Terminal Point Method: includes hysteresis, non-repeatability, zero offset and span setting errors)
Stability:	XL & IXL: ±0.25% of span/year at reference conditions RXL: ±0.5% of span/year at reference conditions
Media Compatibility:	Clean, dry and non-corrosive gas NOT FOR USE ON LIQUIDS
Standard Response Time:	250 ms

ENVIRONMENTAL SPECIFICATIONS

Temperature Limits: Storage:	XL & RXL: –40°F to 180°F (–40°C to 82°C) IXL: –40°F to 210°F (–40°C to 99°C)
Operating:	XL: –20°F to 160°F (29°C to 71°C) IXL standard: –20°F to 185°F (29°C to 85°C) IXL FM version: –4°F to 104°F (–20°C to 40°C) RXL: 0°F to 160F (–18°C to 70°C)
Compensated Range:	XL: 35°F to 135°F (1.7°C to 57°C) IXL: 0°F to 160°F (–18°C to 71°C) RXL: 40°F to 125°F (4.4°C to 52°C)
Thermal Coefficients:	Zero & Span: XL ±0.015% of span/°F (From 70°F/21°C reference temperature) IXL 0.25%: ±0.01% of span/°F IXL 0.5%: ±0.02% of span/°F RXL: ±0.025% of span/°F
Vibration Sweep:	XL/RXL: Less Than 0.05% span/g temporary effect 0-60 Hz. IXL: Less Than 0.2% of span/g temporary effect 10-130 Hz.
Humidity Effects:	XL & RXL: No performance effect at 10-95% relative humidity noncondensing IXL: No performance effect at 0-95% relative humidity noncondensing

FUNCTIONAL SPECIFICATIONS

Mounting Position Effect:	XL: 0.5 IWC and higher: ±0.1% of span/g 0.25 IWC: ±0.25% of span/g 0.1 IWC: ±0.5% of span/g	
	IXL:1 IWC and higher: ±0.1% of span/g 0.25 IWC to 0.5 IWC: ±0.5% of span/g 0.1 IWC: ±0.8% of span/g	
	RXL:0.5 IWC and higher: ±0.1% of span/g Below 0.5 IWC: ±0.25% of span/g	
RXL, XL:		
Max. Static (Line) Pressure: 25 psi	Proof: 15 psid	Burst: 25 psid
IXL:		
Max. Static (Line) Pressure: 100 psi	Proof: 20 psid	Burst: 50 psid

ELECTRICAL SPECIFICATIONS

Circuit Protection:	Reverse Wiring Protected
Potentiometers:	XL: (Externally accessible, non-interactive) Zero: ±10% of span Span: ±10% of span IXL: (Internal) Zero: ±10% of span Span: ±10% of span RXL: (Externally accessible, non-interactive) Zero: ±5% of span Span: ±3% of span
Supply Current:	<6 mA for Voltage output (XL and RXL) 2.6 mA typical for Voltage output (IXL only)
Warm-up Time:	5 sec. max. to meet stated specifications from initial Power-up (XL and RXL) Less than 1 second (IXL only)

PHYSICAL SPECIFICATIONS

Electrical Connections:	Screw Termination

HAZARDOUS SPECIFICATIONS

(IXL only with XFM option)	Intrinsically Safe: Class I, II, III Div. 1 Groups A, B, C, D, F and G when properly installed with an approved FM intrinsically safe barrier. Non-incendive: Class I, II and III Div. 2, Groups A, B, C, D, F and G

WETTED MATERIALS

Models	Media
RXLdp, XLdp, IXLdp	Clean, dry air/gases compatible with Aluminum, Titanium, ABS, Ceramic, Silicon, & Silicone RTV NOT FOR USE ON LIQUIDS

NON-WETTED MATERIALS

Models	Housing
RXLdp	SS/Lexan
XLdp, IXLdp	300 series SS

Distribu
CALFER DE MÉXICO®
CONTROLES AUTOMÁTICOS INDUSTRIALES
50 ANIVERSARIO
www.calfer.com.mx 01 800 0125 742 /CalferMx
soporte.tecnico2@calfer.com.mx

ORDERING CODE Example:	XL3	F02	42	ST	2IW	XNH
Model & Accuracy						
IX3 - IXLdp Series, ±0.25% of span, ±0.01% span T.C. /°F						
IX5 - IXLdp Series, ±0.5% of span, ±0.02% span T.C. /°F						
RX7 - RXLdp Series, ±1.00%of span, ±0.025% span T.C. /°F						
XL3 - XLdp Series, ±0.25% of span, ±0.015% span T.C. /°F	XL3					
XL5 - XLdp Series, ±0.5% of span, ±0.015% span T.C. /°F						
Pressure Connection						
F01 - ⅛ NPT Female (RXLdp only)						
F02 - ¼ NPT Female (XLdp and IXLdp only)		F02				
MB1 - Board level/No case (RXLdp only)						
MB2 - ¼ Barbed Male (XLdp and RXLdp only)						
MB8 - ⅛ Barbed Male (XLdp and RXLdp only)						
Output Signal						
05 - 0-5 Vdc (IXLdp & RXLdp only) – 12-36 Vdc						
10 - 0-10 Vdc (RXLdp only – 12-36 Vdc)						
15 - 1-5 Vdc – 12-36 Vdc						
16 - 1-6 Vdc – 12-36 Vdc						
25 - ±2.5 Vdc (IXLdp only) – 12-36 Vdc						
42 - 4-20mA – 12-36 Vdc			42			
50 - ±5.0 Vdc (IXLdp only) – 12-36 Vdc						
Electrical Termination						
ST - Screw Terminal				ST		
Pressure Range						
Unidirectional Ranges (differential)						
P1IW - 0.10 IWD						
P25IW - 0.25 IWD						
P5IW - 0.50 IWD						
P75IW - 0.75 IWD (XLdp and RXLdp only)						
1IW - 1.00 IWD						
1P5IW - 1.50 IWD (XLdp and RXLdp only)						
2IW - 2.00 IWD					2IW	
2P5IW - 2.50 IWD						
3IW - 3.00 IWD						
5IW - 5.00 IWD						
10IW - 10.00 IWD						
15IW - 15.00 IWD (XLdp and IXLdp only)						
20IW - 20.00 IWD (IXLdp only)						
25IW - 25.00 IWD						
50IW - 50.00 IWD						
100IW - 100.00 IWD (IXLdp only)						
150IW - 150.00 IWD (IXLdp only)						
200IW - 200.00 IWD (IXLdp only)						
Bi-directional Ranges						
P05IWL - ±0.05 IWD (XLdp and IXLdp only)						
P1IWL - ±0.10 IWD						
P2IWL - ±0.20 IWD (IXLdp only)						
P25IWL - ±0.25 IWD						
P5IWL - ±0.50 IWD						
1IWL - ±1.00 IWD						
2IWL - ±2.00 IWD (XLdp and IXLdp only)						
2P5IWL - ±2.50 IWD						
3IWL - ±3.00 IWD (XLdp and IXLdp only)						
5IWL - ±5.00 IWD						
10IWL - ±10.00 IWD						
15IWL - ±15.00 IWD (IXLdp only)						
20IWL - ±20.00 IWD (IXLdp only)						
25IWL - ±25.00 IWD						
50IWL - ±50.00 IWD						
100IWL - ±100.00 IWD (IXLdp only)						
Option (if including an option(s) must include an "X")						X _ _
1D - Variable dampening, 0-30 sec (IXLdp only)						
41 - 5:1 Turndown (IXLdp only)						
CE - CE Approval (with 4-20 mA only, available on RXLdp and XLdp only)						
CL - Custom pressure range calibration						
FM - FM Approval (with 4-20 mA output only and for IXLdp only. FM cannot be offered with options X1D or XX2)						
NH - SS tag						NH
NN - Paper tag						
RH - 9 pt. NIST Traceable calibration report (for RXLdp only)						
RK - Back plate adapter (for RXLdp only)						
V9 - Calibrated vertically (XLdp only)						
X1 - Fast response time (IXLdp and XLdp only)						
X2 - Slow response time (IXLdp and XLdp only)						

Distribuidor Autorizado CALFER

CALFER DE MÉXICO®
CONTROLES AUTOMÁTICOS INDUSTRIALES

50 ANIVERSARIO

www.calfer.com.mx 01 800 0125 742 /CalferMx

soporte.tecnico2@calfer.com.mx

CXLdp Pressure Transmitter

ASHCROFT®
Trust the shield.®

FEATURES

- Rugged ABS package capable of DIN rail or standard panel mounting
- LED status indicator
- Detachable Euro style terminal block
- 22 standard pressure ranges all capable of withstanding 15 psi
- Unidirectional and Bidirectional ranges

RUSH GOLD Service

PERFORMANCE SPECIFICATIONS	
Reference Temperature:	70°F (21°C)
Accuracy Class:	±0.25%, ±0.4%, ±0.8% of span (Terminal Point Method: includes non-linearity, hysteresis, non-repeatability, zero offset and span setting errors)
Stability:	±0.25% of span/year at reference conditions
Media Compatibility:	Clean, dry and non-corrosive gas NOT FOR USE ON LIQUIDS
Standard Response Time:	250 ms
ENVIRONMENTAL SPECIFICATIONS	
Temperature Limits:	
Storage:	-40°F to 180°F (-40°C to 82°C)
Operating:	0°F to 160°F (-17°C to 71°C)
Compensated Range:	35°F to 130°F (1.6°C to 54°C)
Thermal Coefficients:	Zero & Span: ±0.03% of span/°F (From 70°F/21°C reference temperature)
Humidity Effects:	No performance effect at 10-95% relative humidity-noncondensing
Enclosure Rating:	NEMA 1 type Fire-retardant ABS (meets UL94-5VA)
FUNCTIONAL SPECIFICATIONS	
Max. Static Line Pressure: 25 psi	Proof 15 psid / Burst 25 psid
Mounting Position Effect:	±1% of span/g (Calibration in vertical position is standard.)
ELECTRICAL SPECIFICATIONS	
Circuit Protection:	Reverse polarity and miss-wire protected
Potentiometers:	Zero & Span: ±5% of span (Externally accessible)
PHYSICAL SPECIFICATIONS	
Enclosure Rating:	NEMA Type 1
WETTED MATERIALS	
Model	Media
CXLdp	Clean, dry air/gases compatible with Alum- num, Titanium, ABS, Ceramic, Silicon, & Silicone RTV NOT FOR USE ON LIQUIDS
NON-WETTED MATERIALS	
Model	Housing
CXLdp	Fire-retardant ABS (Meets UL 94-5VA)

CXLdp
Transducer - ¼˝ Barbed Male

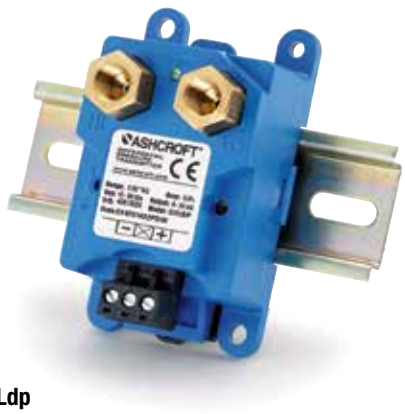

CXLdp
Transducer - ⅛ NPT Female

CE RoHS COMPLIANT

Distribuidor Autorizado CALFER
CALFER DE MÉXICO®
CONTROLES AUTOMÁTICOS INDUSTRIALES
50 ANIVERSARIO
www.calfer.com.mx 01 800 0125 742 /CalferMx
soporte.tecnico2@calfer.com.mx

ORDERING CODE	Example:	CX4	MB2	42	P25IW	XRH
Model						
CX3 - CXLdp Series, 0.25% of span, ± 0.03% span T.C. /°F						
CX4 - CXLdp Series, 0.40% of span, ± 0.03% span T.C. /°F		CX4				
CX8 - CXLdp Series, 0.80% of span, ± 0.03% span T.C. /°F						
Pressure Connection						
F01 - ⅛ NPT Female						
MB1 - Board level only, no housing (consult factory)						
MB2 - ¼ Barbed Male			MB2			
Output Signal	**Supply Voltage:**					
10 - 0-10 Vdc (includes user selectable 0-5 Vdc output)	14-36 Vdc or 24 Vac					
42 - 4-20mA	12-36 Vdc			42		
Pressure Range						
Unidirectional Ranges (differential)						
P1IW - 0.1 IWD						
P25IW - 0.25 IWD					P25IW	
P5IW - 0.50 IWD						
P75IW - 0.75 IWD						
1IW - 1.00 IWD						
2IW - 2.00 IWD						
2P5IW - 2.50 IWD						
3IW - 3.00 IWD						
5IW - 5.00 IWD						
10IW - 10.00 IWD						
15IW - 15.00 IWD						
25IW - 25.00 IWD						
Bi-directional Ranges						
P1IWL - ±0.10 IWD						
P25IWL - ±0.25 IWD						
P5IWL - ±0.50 IWD						
1IWL - ±1.00 IWD						
2IWL - ±2.00 IWD						
2P5IWL - ±2.50 IWD						
3IWL - ±3.00 IWD						
5IWL - ±5.00 IWD						
10IWL - ±10.00 IWD						
15IWL - ±15.00 IWD						
Option (if including an option(s) must include an "X")						X _ _
3P - 3 Point calibration data (for CX4 and CX8 only)						
AH - Plenum/conduit kit packaged with CXLdp						
NH - SS tag						
NN - Paper tag						
RH - 9 pt. NIST traceable calibration report (optional for CX4 and CX8 only, standard for CX3).						RH

Distribuidor Autorizado CALFER
CALFER DE MÉXICO®
CONTROLES AUTOMÁTICOS INDUSTRIALES
50 ANIVERSARIO
www.calfer.com.mx 01 800 0125 742 /CalferMx
soporte.tecnico2@calfer.com.mx

DXLdp Pressure Transmitter

ASHCROFT®
Trust the shield.®

FEATURES

- The exclusive patented Ashcroft SpoolCal™ actuator provides in-place system calibration
- 2:1 range turndown options
- Front access test jacks provide on-line signal reference without removing wiring
- LED range status indicators for instant trouble-shooting information
- DIN rail mount dramatically reduces installation and calibration costs

DXLdp
Transducer

PERFORMANCE SPECIFICATIONS	
Reference Temperature:	70°F (21°C)
Accuracy Class:	Three Options: ±0.25%, ±0.5%, ±1.0% of span (Terminal Point Method: includes non-linear-ity, hysteresis, non-repeatability, zero offset and span setting errors)
Stability:	±0.25% of span/year
Standard Response Time:	250 ms
ENVIRONMENTAL SPECIFICATIONS	
Temperature Limits:	
Storage:	-40°F to 180°F (-40°C to 82°C)
Operating:	-20°F to 160°F (-29°C to 71°C)
Compensated Range:	35°F to 135°F (1.6°C to 57°C)
Thermal Coefficients:	Zero & Span: ±0.02% of span/°F (From 70°F/21°C reference temperature)
Humidity Effects:	No performance effect at 10-95% relative humidity-noncondensing
FUNCTIONAL SPECIFICATIONS	
Max. Static (Line) Pressure: 25 psi	Proof: 15 psid / Burst: 25 psid
Mounting Position Effect:	
0.5 in.W.C. and higher	0.1% of span/g
Below 0.5 in.W.C.	0.25% of span/g
ELECTRICAL SPECIFICATIONS	
Circuit Protection:	Reverse Wiring Protected.
Zero and Span Potentiometers: (Front accessible, non-inteactive)	
Zero:	±5% F.S.
Span:	±3% F.S.
Supply Current:	<10 mA for Voltage
Warm-up Time:	5 sec. max. to meet stated specifications from initial Power-up
PHYSICAL SPECIFICATIONS	
Enclosure Rating:	NEMA 1 case
Mounting:	DIN rail types EN50022, 35 and 45
WETTED MATERIALS	
Model	Media
DXLdp	Clean, dry air/gases compatible with Alum-num, Titanium, ABS, Ceramic, Silicon, & Silicone RTV NOT FOR USE ON LIQUIDS
NON-WETTED MATERIALS	
Model	Housing
DXLdp	Glass-filled polycarbonate (UL94-V-1)

RoHS COMPLIANT CE

Distribuidor Autorizado CALFER
CALFER DE MÉXICO®
CONTROLES AUTOMÁTICOS INDUSTRIALES
50 ANIVERSARIO
www.calfer.com.mx 01 800 0125 742 /CalferMx
soporte.tecnico2@calfer.com.mx

ORDERING CODE Example:	DX3	F01	42	ST	P5IW	XPV
Model & Accuracy						
DX3 - DXLdp Series, ±0.25% of span, ±0.02% span T.C. /°F	DX3					
DX5 - DXLdp Series, ±0.50% of span, ±0.02% span T.C. /°F						
DX7 - DXLdp Series, 1.00% of span, ±0.02% span T.C. /°F						
Pressure Connection						
F01 - ⅛ NPT -Female		F01				
MB2 - 11/64 Barbed Male						
Output Signal						
Power Requirement:						
05 - 0-5 Vdc–(12-36 Vdc)						
10 - 0-10 Vdc–(12-36 Vdc)						
15 - 1-5 Vdc–(12-36 Vdc)						
16 - 1-6 Vdc–(12-36 Vdc)						
42 - 4-20mA (2-wire)–(12-36 Vdc)			42			
Electrical Termination						
ST - Screw terminal				ST		
Pressure Range						
Unidirectional Ranges (differential)						
P1IW - 0.10 IWD						
P25IW - 0.25 IWD						
P5IW - 0.50 IWD					P5IW	
P75IW - 0.75 IWD						
1IW - 1.00 IWD						
1P5IW - 1.50 IWD						
2IW - 2.00 IWD						
2P5IW - 2.50 IWD						
3IW - 3.00 IWD						
5IW - 5.00 IWD						
10IW - 10.00 IWD						
15IW - 15.00 IWD						
20IW - 20.00 IWD						
25IW - 25.00 IWD						
50IW - 50.00 IWD						
Bi-directional Ranges						
P05IWL - ±0.05 IWD						
P1IWL - ±0.10 IWD						
P25IWL - ±0.25 IWD						
P5IWL - ±0.50 IWD						
P75IWL - ±0.75 IWD						
1IWL - ±1.00 IWD						
2IWL - ±2.00 IWD						
2P5IWL - ±2.50 IWD						
3IWL - ±3.00 IWD						
5IWL - ±5.00 IWC						
10IWL - ±10.00 IWD						
25IWL - ±25.00 IWD						
Option (if including an option(s) must include an "X")						X _ _
21 - 2:1 Turndown						
CL - Custom pressure range calibration						
DL - LED range status indicators (includes front access test jacks)						
NH - SS tag						
NL - Front access test jacks (no LED indication)						
NN - Paper tag						
PV - SpoolCal™ process valve actuator						PV
RH - 9 pt. NIST traceable calibration report (optional for DX7/1.00% accuracy version, standard for DX3 and DX5)						
X1 - Fast response time (10 ms)						
X2 - Slow response time (1 sec)						

LEVEL TRANSDUCERS

SL-17..... 142-143
Product Information..... 144-145

SL-17 Submersible Pressure Transmitter

ASHCROFT®
Trust the shield.®

FEATURES

- Complete 316L SS construction
- IP68/NEMA 6P housing
- 4-20mA output (2 wire)
- Unit of measure selection (psig, feet or meters of IWC)
- Optional NIST traceable calibration chart (9-Point)

SL-17 Transducer

PERFORMANCE SPECIFICATIONS

Reference Temperature:	70°F (21°C)
Accuracy:	±0.25% of span, terminal point (>5 psi); ±0.5% of span, terminal point (<5 psi); Includes effects of linearity, hysteresis and repeatability
Stability:	±0.25% of span
Engineering Units:	psi, bar, ftH_20, mH_20 and customer defined

ENVIRONMENTAL SPECIFICATIONS

Temperature Limits:	Storage: 14°F to 140°F (–20°C to 60°C) Compensated: 14°F to 104°F (–10°C to 40°C) Operating: 14°F to 104°F (–10°C to 40°C) (For non-frozen liquid applications only)
Temperature Effects (–10°C to 40°C):	±1% TEB(>5 psi) ±1.5% span, terminal point (<5 psi)
Humidity:	0-100%RH (Based on cable vented to clean, dry, non-corrosive atmosphere or proper use of termination desiccant box)
Enclosure Ratings:	NEMA 6P IP68

FUNCTIONAL SPECIFICATIONS

Overpressure (FS):	Proof:	Burst:
1.5 to ≤5 psi	3 X Range	5 X Range
10 psi	3 X Range	7.5 X Range
15 to ≤30 psi	2 X Range	5 X Range
75 psi	1.8 X Range	4.7 X Range
150 psi	2 X Range	4 X Range
300 psi	2 X Range	3 X Range
Maximum Turndown:	2:1 from original sensor pressure range	
Vibration & Shock:	IEC 60068-2-6 (Based on sensor range)	

ELECTRICAL SPECIFICATIONS

Output Signal:	4-20mA (2 wire)
Supply Voltage:	10-36 Vdc
Insulation Resistance:	50 Vdc (100MΩ)
CE Compliance:	• EMI Class A/EMS Table 2 EN61326-1:2006 • Annex BB (Pressure Transducer) EN61326-2-3:2007 • ESD EN61000-4-2 • Burst EN61000-4-4 • Surge EN61000-4-5
Withstand Voltage:	350 Vdc

PHYSICAL SPECIFICATIONS

Weight:	Sensor (120g)
Nose Cones:	standard (13g), weighted (225g)
Labels:	Laser-etched with customer part number
Cable Internal Construction:	4-wire 22 AWG conductors (red, black, green, white)
Vent tube:	0.060˝ ID polyethylene Semi-rigid PVC with shield and Kevlar strength member
Cable Pull Strength:	180 lb
Cable Voltage Rating:	300V
Load Limitation:	4-20mA Output Only

WETTED MATERIALS

Enclosure:	316L SS
Cable External Jacket:	Coated black polyurethane

RoHS COMPLIANT

CE

Distribuidor Autorizado CALFER
CALFER DE MÉXICO®
CONTROLES AUTOMÁTICOS INDUSTRIALES
50 ANIVERSARIO
www.calfer.com.mx 01 800 0125 742 /CalferMx
soporte.tecnico2@calfer.com.mx

SL-17 Submersible Pressure Transmitter

ASHCROFT®
Trust the shield.®

ORDERING CODE Example:	SL17	3	SNC	T	42	010	F	P	10#	XC4
Model										
SL17 - Submersible transducer	SL17									
Accuracy										
3 - ±0.25% of span		3								
5 - ±0.5% of span (1.5 psi range only)										
Nose Fitting										
SNC - Standard nose cone			SNC							
P5C - Weighted nose cone										
Joint Type										
T - Threaded				T						
W - Welded										
Output Signal										
42 - 4-20mA					42					
Cable Length (custom length available ex. for 35 feet code as 035)										
001 - Meters only										
002 - Meters only										
005										
010						010				
015										
020										
025										
030										
050										
060										
075										
100										
120										
150										
200										
300 - Feet only										
400 - Feet only										
500 - Feet only										
700 - Feet only										
Measurement of Cable										
F - Feet							F			
M - Meters										
Cable Type										
P - Polyurethane								P		
Pressure Range										
PSI										
1P5# - 0-1.5 psi										
5# - 0-5 psi										
10# - 0-10 psi									10#	
15# - 0-15 psi										
30# - 0-30 psi										
60# - 0-60 psi										
100# - 0-100 psi										
160# - 0-160 psi										
200# - 0-200 psi										
300# - 0-300 psi										
Ft. H_2O										
10FW - 10 ft.H_2O										
20FW - 20 ft.H_2O										
30FW - 30 ft.H_2O										
50FW - 50 ft.H_2O										
100FW - 100 ft.H_2O										
150FW - 150 ft.H_2O										
200FW - 200 ft.H_2O										
300FW - 300 ft.H_2O										
400FW - 400 ft.H_2O										
500FW - 500 ft.H_2O										
Mt H_2O										
5LW - 5mH_2O										
10LW - 10mH_2O										
15LW - 15mH_2O										
20LW - 20mH_2O										
30LW - 30mH_2O										
50LW - 50mH_2O										
75LW - 75mH_2O										
100LW - 100mH_2O										
125LW - 125mH_2O										
150LW - 150mH_2O										
Bar										
0.6BR - 0.6 Bar										
1BR - 1 Bar										
1.6BR - 1.6 Bar										
2.5BR - 2.5 Bar										
4BR - 4 Bar										
6BR - 6 Bar										
10BR - 10 Bar										
Option (if including an option(s) must include an "X")										X _ _
C4 - Calibration chart										C4

Distribuidor Autorizado CALFER
CALFER DE MÉXICO®
CONTROLES AUTOMÁTICOS INDUSTRIALES
50 ANIVERSARIO
www.calfer.com.mx 01 800 0125 742 /CalferMx
soporte.tecnico2@calfer.com.mx

ACCURACY:
Accuracy is defined as the degree of conformity of a measure to an accepted standard or true value. It is a measure of the actual output deviation from the standard or true value reported as a percentage (±) of output span. Accuracy accounts for the effects of linearity, hysteresis and repeatability. For Ashcroft transducers, the maximum errors due to these effects for are reported separately.

LINEARITY –
BEST FIT STRAIGHT LINE (B.F.S.L.)
The best fit straight line method models a linear fit of the calibration curve that is positioned as to minimize the maximum deviation between the curves. Linearity is defined as the maximum deviation of the calibration curve from the best fit straight line and is specified as ±% of span.

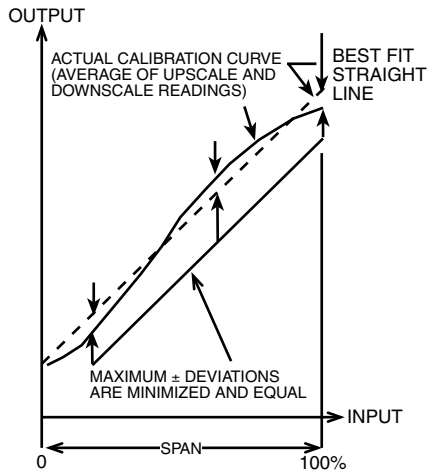

LINEARITY –
TERMINAL POINT (T.P.)
The terminal point method draws a straight line between upper and lower range values of the calibration curve. Linearity is defined as the maximum deviation of the calibration curve from the terminal point line and is specified as ±% of span.

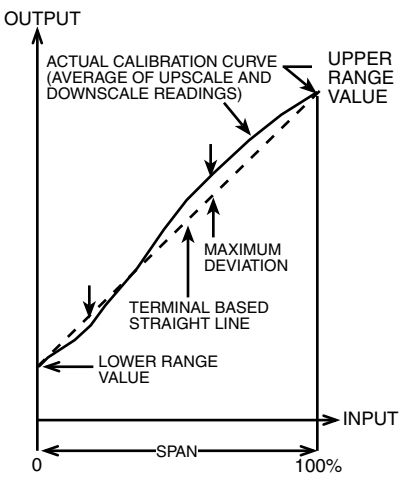

HYSTERESIS
Hysteresis measures a difference in response when approaching the value from a higher pressure vs. a lower pressure. It is the maximum difference in output when the value is approached with increasing and then decreasing pressure during full range traverses. Hysteresis is specified as ±% of span.

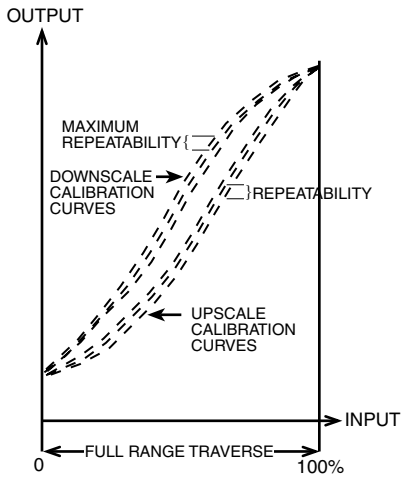

REPEATABILITY
Repeatability is the closeness of agreement among a number of consecutive measurements of the output for the same value of the input under the same operating conditions, approaching from the same direction, for full range traverses. It is specified as ±% of span.

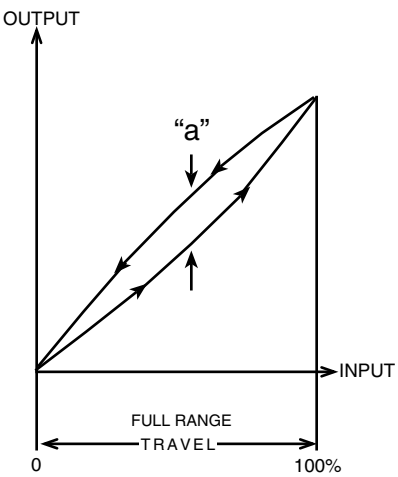

TEMPERATURE ERROR
Temperature error accounts for the change in output when the product is changed from room (reference) temperature to a specified temperature extreme. Temperature errors are defined as the maximum change in output at any input value within the range, and are defined in the following two ways:

THERMAL COEFFICIENT DATA
Thermal Coefficient of Zero – the zero shift due to changes in temperature from room (reference) temperature to the specified limits of the operating range. Specified as ±% of span/°F over a temperature range.

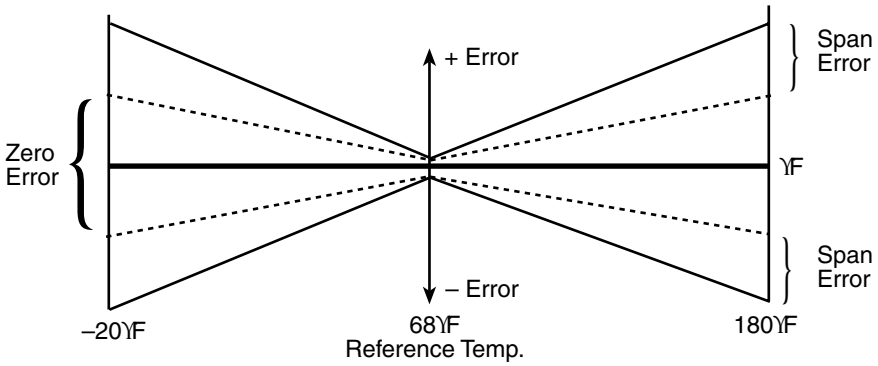

Thermal Coefficient of Span – the span shift due to changes in temperature from room (reference) temperature to the specified limits of the operating range. **Specified as ±% of span/°F over a temperature range.**

THERMAL ERROR DATA
Thermal Error of Zero – the zero shift due to changes in temperature from room (reference) temperature to the specified limits of the operating range. Specified as ±% of span (over a temperature range).

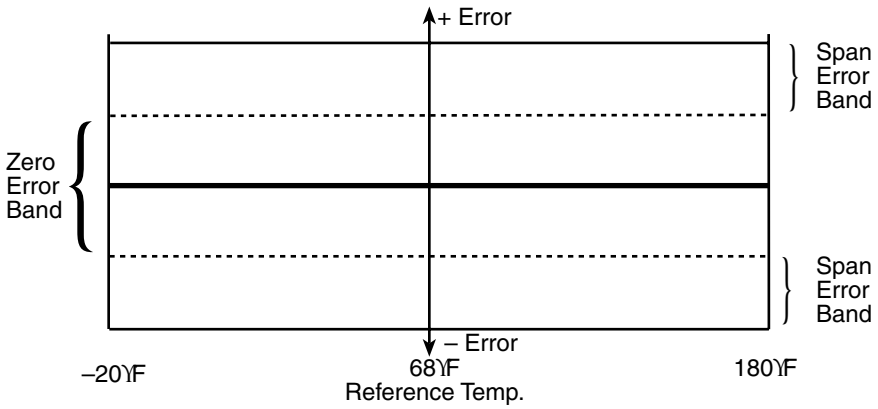

Thermal Error of Span – the span shift due to changes in temperature from room (reference) temperature to the specified limits of the operating range. Specified as ±% of reading (over a temperature range).

Note: Definitions are in accordance with:
ANSI/ISA S51.1 - 1993 “Process Instrumentation Terminology”
ANSI/ISA S37.1 - 1982 “Electrical Transducer Terminology”

Distribuidor Autorizado CALFER
CALFER DE MÉXICO®
CONTROLES AUTOMÁTICOS INDUSTRIALES
50 ANIVERSARIO
www.calfer.com.mx 01 800 0125 742 /CalferMx
soporte.tecnico2@calfer.com.mx

PANEL METER

DM61 148

DM61 Panel Meter

ASHCROFT®
Trust the shield.®

FEATURES

- Large 2 line 6-digit red LED display
- Field selectable inputs, voltage, current or Modbus
- Optional relay and isolated 4-20mA outputs
- Built in DC power supply
- AC or DC supply versions available

DM61
Panel Meter

UL LISTED

PERFORMANCE SPECIFICATIONS

Sensor Inputs:	One Field selectable: 0-20, 4-20 mA, ±10 Vdc (0-5, 1-5, 0-10 V), Modbus PV (slave)
Display:	Two lines of 6 Digits Display reads –99999 to 999999 Red LEDs with leading 0 blanking
Character Height:	Upper line: 0.60″ (15mm) Lower line: 0.46″ (12mm)
Intensity (Adjustable):	8 settings
Update Rate:	200ms
Accuracy:	±0.03% of calibrated span ±1 count Square root & programmable exponent accuracy range: 10-100% of calibrated span
Programming Methods:	Panel buttons, digital input, PC and DPM ProView software, Modbus registers, or cloning with copy function.
Noise Filter:	Selectable from 2 to 199 (0 disables filter)
Bypass:	Selectable from 0.1 to 99.9% of calibrated span
Max/Min (PV) Display:	Stored until reset or power cycled to the meter
Password Protection:	3-level programmable passwords
Non-Volatile Memory:	Programmed settings stored for 10 years (min.)

ELECTRICAL SPECIFICATIONS

Power Options:	85-265 Vac 50/60 Hz, 90-265 Vdc 20 W (max.) or jumper selectable 12/24 Vdc ±10%, 15 W (max.)
Isolated Transmitter Power Supply:	Terminals P+ & mp; P-: 24 Vdc ±5% @ 200 mA (max.)
Normal Mode Rejection:	Greater than 60 dB at 50/60 Hz
Isolation:	4 kV input/output-to-power line. 500 V input-to-output or output-to-P+ supply

ENVIRONMENTAL SPECIFICATIONS

Operating Temperature Range:	–40°F to 149°F (-40°C to 65°C)
Storage Temperature Range:	–40°F to 185°F (–40°C to 85°C)
Relative Humidity:	0-90% R.H. non-condensing.
Coefficients Temperature:	0.005% of calibrated span/°C max from 0/65°C (32/149°C) ambient, 0.01% of calibrated span/°C max from –40/0°C (–40/32°F) ambient

PHYSICAL SPECIFICATIONS

Front Panel:	NEMA 4X, IP65 Capable when installed in a suitable enclosure
Mounting:	Panel (mounting brackets included)
Weight:	9.5 oz
Enclosure:	⅛ DIN, high impact plastic, UL 94V-0, color: black
Electrical Connections:	Removable screw terminal blocks accept 12 to 22 AWG wire, RJ45 for external relays, digital I/O, and serial communication adapters
UL File Number:	UL & c-UL Listed. E160849; 508 Industrial Control Equipment

ORDERING CODE

PART NUMBER	SWITCHES & OUTPUTS	POWER SUPPLY
DM61AAC	None	AC
DM61CAC	2 Relays	AC
DM61BAC	4-20mA	AC
DM61EAC	4 Relays	AC
DM61DAC	2 Relays & 4-20mA	AC
DM61FAC	4 Relays & 4-20mA	AC
DM61ADC	None	DC
DM61CDC	2 Relays	DC
DM61BDC	4-20mA	DC
DM61EDC	4 Relays	DC
DM61DDC	2 Relays & 4-20mA	DC
DM61FDC	4 Relays & 4-20mA	DC

Distribuidor Autorizado CALFER
CALFER DE MÉXICO®
CONTROLES AUTOMÁTICOS INDUSTRIALES
50 ANIVERSARIO
www.calfer.com.mx 01 800 0125 742 /CalferMx
soporte.tecnico2@calfer.com.mx

DIAPHRAGM SEALS

THREADED SEALS

100/200/300..... 150-151
310-315..... 152
311-312..... 153
330 154
510-511..... 155
400-401/500-501..... 156-157
740-741..... 158

ASHCROFT®
Trust the shield.®

FEATURES

- Alloy (6 top housing and pressure instrument)
- Flushing port (101, 201 & 301) provides for easy cleaning of process
- Continuous duty design prevents loss of process fluid if instrument is removed

GOLD Service

SPECIFICATIONS

Connection Style:	100, 200, 300: threaded 101, 201, 301: threaded with flushing port
Process Connection Size:	¼ to 1½ NPT Female ¼ to 1 NPT Male
Instrument Connection Size:	¼ or ½ NPT
Pressure Ratings (MAWP):	2,500 psi (OPT. 5,000 psi)
Added Tolerance:	±0.5% typical
Wetted Components:	Diaphragm (see Table 1) Bottom housing (see Table 2)
Non-Wetted Components:	Top Housing: Nickel plated carbon steel (STD.); 316L SS, Monel®, titanium (OPT.) Bolt/Clamp rings: Carbon steel Nuts/bolts: Zinc plated alloy steel

100, 200, 300
Threaded Seal

CRN

TABLE 1 - DIAPHRAGM MATERIALS

Material	Letter Code	100 Series	200 Series	300 Series	Notes
304L SS	C	•	•		
Carpenter 20®	D	•	•		
904L SS	F		•		
Hastelloy® B	G	•	•		
Hastelloy® C-276	H	•	•		
Hastelloy® C-22	J	•	•		
Kalrez®	K		•	•	Temp limits: 30°F to 212°F Max. pressure: 500 psi
Nickel	N	•	•		
Monel® 400	P	•	•		200-series must be ordered with XYM Monel® top housing option
316L SS	S	•	•		
PTFE	T		•	•	Temp limits: -40°F to 400°F
Titanium	Ti		•		Includes titanium top housing
Gold Plated 316L SS	W	•			
Viton®	Y		•	•	Temp limits: -40°F to 350°F Max. pressure: 500 psi

TABLE 2 - BOTTOM HOUSING MATERIALS

Material	Letter Code	Notes
Super Duplex 2507®	A	
Carbon Steel	B	
304L SS	C	
Carpenter 20®	D	
347 SS	E	
904L SS	F	
Hastelloy® B	G	
Hastelloy® C-276	H	
Hastelloy® C-22	J	
PVDF	KY	Only offered in ½ NPT, ¼ NPT, and socket weld process connections. Not available with flushing connection. PVDF Temperature Limits: 200 psi - 74°F, 125 psi - 125°F, 80 psi - 150°F
Incoloy® 825	L	
Monel® 400	M	
Nickel	N	
321 SS	Q	
316L SS	S	
Titanium	Ti	
PVC	V	Only offered in ½ NPT, ¼ NPT, and socket weld process connections. Not available with flushing connection. PVC Temperature Limits: 200 psi - 74°F, 125 psi - 125°F, 80 psi - 150°F
Inconel® 625	W	
Duplex 2205®	Z	

Distribuidor Autorizado CALFER
CALFER DE MÉXICO®
CONTROLES AUTOMÁTICOS INDUSTRIALES
50 ANIVERSARIO
www.calfer.com.mx 01 800 0125 742 /CalferMx
soporte.tecnico2@calfer.com.mx

ASHCROFT®
Trust the shield.®

ORDERING CODE Example:	10	2	01	S	S	02T	XCK	NH
Process Connection Size								
25 - ¼ NPT Female								
50 - ½ NPT Female								
75 - ¾ NPT Female								
10 - 1 NPT Female	10							
15 - 1½ NPT Female								
02 - ¼ NPT Male								
04 - ½ NPT Male								
06 - ¾ NPT Male								
08 - 1 NPT Male								
SA - ¼″ Socket weld								
SB - ½″ Socket weld								
SC - ¾″ Socket weld								
SD - 1″ Socket weld								
Diaphragm Type								
1 - 100 series capsule diaphragm threaded into top housing								
2 - 200 series diaphragm welded (metallic) or bonded (elastomeric) to top housing		2						
3 - 300 series elastomeric diaphragm clamped between top and lower housing								
Flushing Port								
00 - No flushing port								
01 - Flushing port in lower housing			01					
Dialphragm Materials								
S - 316L SS				S				
See Table 1 on page 150								
Bottom Housing Materials								
S - 316L SS					S			
See Table 2 on page 150								
Instrument Connection Size								
02T - ¼ NPT Female instrument connection						02T		
04T - ½ NPT Female instrument connection								
Options (if choosing an option(s) must include an "X")							X__	
Fill Fluid (for seals attached to instruments)								
CG - Glycerin								
CK - Silicone SF-96							CK	
CF - Halocarbon®								
See Table 3 on page 175 for more available fill fluids								

Optional Features

AW - Single ½″ flushing connection (Process connection must be ¾ NPT or smaller)

DB - Dual ½″ flushing connections (Process connection must be ¾ NPT or smaller)

DK - Dual ¼″ flushing connections

PU - Pipe plug for flushing connection (Plug will match bottom housing material. Seals with flushing connections only)

YT - 316L SS top housing

YM - Monel® 400 top housing (Must be ordered with Monel® or tantalum diaphragm)

SB - SS clamping bolts

SE - SS rings and bolts

HP - High-pressure clamping rings (Increases MAWP to 5,000 psi unless otherwise limited by material 100, 300 series only)

LD - SS locking device

NH - SS instrument tag

NX - Teflon®-free diaphragm seal (200 psi maximum working pressure, 200 series only)

DU - Instrument welded to top housing (Instrument socket must be like-material to top housing)

MQ - Positive material identification

6B - Cleaned for oxygen service

CD-5 - NACE compliance certificate

Distribuidor Autorizado
CALFER DE MÉXICO®
CONTROLES AUTOMÁTICOS INDUSTRIALES
50 ANIVERSARIO
www.calfer.com.mx 01 800 0125 742 /CalferMx
soporte.tecnico2@calfer.com.mx

ASHCROFT®
Trust the shield.®

FEATURES

- No gaskets or bolts
- All-welded construction
- Compact design for tight spaces
- Available with ⅛ NPT flushing connection
- Designed for use with transducers and 3½″ or smaller gauges

GOLD Service

310
Threaded Seal

SPECIFICATIONS

Connection Style:	310: All-welded 315: All-welded with flushing connection
Process Connection Size:	310: ⅛ to 1 NPT Male, ¼ or ½ NPT Female 315: ¼ or ½ NPT Female
Instrument Connection Size:	⅛ or ¼ NPT
Pressure Rating (MAWP):	2,500 psi
Added Tolerance:	±0.5% typical
Wetted Components:	Diaphragm & bottom housing
Non-Wetted Components:	Top housing: 316L SS

ORDERING CODE

Example:	01	310	S	S	01T	XCK	NH
Process Connection Size							
01 - ⅛ NPT Male, (available for 310 only)	01						
02 - ¼ NPT Male, (available for 310 only)							
04 - ½ NPT Male, (available for 310 only)							
06 - ¾ NPT Male, (available for 310 only)							
08 - 1 NPT Male, (available for 310 only)							
25 - ¼ NPT Female							
50 - ½ NPT Female							
Seal Type							
310 - All-welded Mini seal no flushing port		310					
315 - All-welded Mini seal with flushing port connection							
Diaphragm Material							
S - 316L SS			S				
H - Hastelloy® C-276							
U - Tantalum							
P - Monel® (Must be ordered with Monel® bottom housing)							
Bottom Housing Materials							
S - 316L SS				S			
H - Hastelloy® C-276							
M - Monel®							
G - Hastelloy® B-2							
Instrument Connection Size							
01T - ⅛ NPT Female					01T		
02T - ¼ NPT Female							
Options (if choosing an option(s) must include an "X")						X__	
Filling Fluid							
CG - Glycerin							
CK - Silicon SF-96						CK	
CF - Halocarbon®							
See Table 3 on page 175 for more available fill fluids							
Optional Features							
PU - Pipe Plug for flushing connection (Must match bottom housing material; 315 seal only)							
NH - SS instrument tag							NH
NN - Paper instrument tag							
DU - Instrument welded to seal							
MQ - Positive material identification							
W1 - Dye penetrant testing							
6B - Cleaned for oxygen service							

Distribuidor
CALFER DE MÉXICO®
CONTROLES AUTOMÁTICOS INDUSTRIALES
50 ANIVERSARIO
www.calfer.com.mx 01 800 0125 742 /CalferMx
soporte.tecnico2@calfer.com.mx

ASHCROFT®
Trust the shield.®

FEATURES

- All-welded construction
- No gaskets or bolts
- Large diaphragm allows for use with 4½″ gauges
- Compact and light weight alternative to larger seals

RUSH GOLD Service

312
Threaded Seal

SPECIFICATIONS

Connection Style:	311: All-welded 312: All-welded with flushing connection
Process Connection Size:	311: ¼ to 1 NPT Male or Female 312: ¼ or ½ NPT Female
Instrument Connection Size:	¼ or ½ NPT Female
Pressure Rating (MAWP):	1,000 psi
Added Tolerance:	±0.5% typical
Wetted Components:	Diaphragm & bottom housing
Non-Wetted Components:	Top housing: 316L SS

ORDERING CODE Example:	02	312	S	S	02T	XCK	NH
Process Connection Size							
02 - ¼ NPT Male (available for 311 only)	02						
04 - ½ NPT Male (available for 311 only)							
06 - ¾ NPT Male (available for 311 only)							
08 - 1 NPT Male (available for 311 only)							
25 - ¼ NPT Female							
50 - ½ NPT Female							
75 - ¾ NPT Female (available for 311 only)							
10 - 1 NPT Female (available for 311 only)							
Seal Type							
311 - Threaded All-welded midi seal no flushing port							
312 - Threaded All-welded midi seal with flushing port		312					
Diaphragm Material							
S - 316L SS			S				
U - Tantalum							
H - Hastelloy® C-276							
Bottom Housing Material							
S - 316L SS				S			
H - Hastelloy® C-276							
Instrument Connection Size							
02T - ¼ NPT Female					02T		
04T - ½ NPT Female							
Options (if choosing an option(s) must include an "X")						X__	
Fill Fluid							
CG - Glycerin							
CK - Silicone SF – 96						CK	
CF - Halocarbon®							
See Table 3 on page 175 for more available fluids							
Optional Features							
PU - Pipe plug for flushing connection (plug will match bottom housing material; 312 seal only)							
NH - SS instrument tag							NH
NN - Paper instrument tag							
DU - Instrument welded to seal (instrument must be of like-material to top housing)							
MQ - Positive material identification							
W1 - Dye penetrant testing							
6B - Cleaned for oxygen service							

Distribu
CALFER DE MÉXICO®
CONTROLES AUTOMÁTICOS INDUSTRIALES
50 ANIVERSARIO
www.calfer.com.mx 01 800 0125 742 /CalferMx
soporte.tecnico2@calfer.com.mx

ASHCROFT®
Trust the shield.®

FEATURES

- All-welded construction
- No gaskets or bolts
- Flush design prevents clogging or build-up of process media
- Compact size to fit in limited-space areas

330
Threaded Seal

SPECIFICATIONS

Connection Style:	Threaded
Process Connection Size:	1 NPT
Instrument Connection Size:	¼ or ½ NPT Female
Pressure Rating (MAWP):	3,000 psi
Added Tolerance:	±1.0% typical
Wetted Components:	Diaphragm & threads
Non-Wetted Components:	Top housing: 316L SS

ORDERING CODE

	Example:	08	330	SX	02T	XCK	DU
Process Connection Size							
08 - 1 NPT Male		08					
Seal Type							
330 Flush threaded seal			330				
Diaphragm Material							
SX - 316L SS				SX			
Instrument Connection Size							
02T - ¼ NPT					02T		
04T - ½ NPT							
Options (if choosing option(s) must include an "X")						X__	
Fill Fluid							
CG - Glycerin							
CK - Silicone SF-96						CK	
CF - Halocarbon®							
See Table 3 on page 175 for more available fill fluids							
Optional Features							
NH - SS instrument tag							
NN - Paper instrument tag							
DU - Instrument welded to seal (instrument connection must be of like material to top housing)							DU
MQ - Positive material identification							
6B - Cleaned for oxygen service							

Distribuidor Autorizado CALFER
CALFER DE MÉXICO®
CONTROLES AUTOMÁTICOS INDUSTRIALES
50 ANIVERSARIO
www.calfer.com.mx 01 800 0125 742 /CalferMx
soporte.tecnico2@calfer.com.mx

ASHCROFT®
Trust the shield.®

FEATURES

- Compact design allows 510/511 seals to fit in confined areas
- Large diaphragm allows for use with a variety of instrumentation including process gauges
- Minimal fill volume

510
Threaded Seal

511 (XHP)
Threaded Seal

SPECIFICATIONS

Connection Style:	510: Threaded 511: Threaded with flushing port
Process Connection Size:	½ NPT Male
Instrument Connection Size:	½ NPT Female
Pressure Rating (MAWP):	Vac. to 1,500 psi @ 100°F (STD.) 1,500 to 10,000 psi @ 100°F (OPT.)
Added Tolerance:	±0.5% typical
Wetted Components:	Diaphragm & bottom housing
Non-Wetted Components:	Top housing: 316 SS, Monel®

ORDERING CODE Example:	04	510	S	S	04T	XCG	NH
Process Connection Size							
04 - ½ NPT Male	04						
Seal Model							
510 All-welded threaded compact seal, with no flushing port		510					
511 All-welded threaded compact seal, with flushing port							
Diaphragm Material							
S - 316L SS			S				
H - Hastelloy® C-276							
P - Monel®							
Bottom Housing Material							
S - 316L SS				S			
H - Hastelloy® C-276							
M - Monel®							
Instrument Connection Size							
04T - ½ NPT Female					04T		
Options (if choosing option(s) must include an "X")						X__	
Fill Fluid							
CG - Glycerin						CG	
CK - Silicone (direct mounted or with capillary)							
CF - Halocarbon® (direct mounted or with capillary)							
See Table 3 on page 175 for more available fill fluids							
Optional Features							
DU - Instrument welded to seal							
PU - Pipe plug for flushing connection (511 only)							
NH - SS tag wired to product							NH
HY - Hydrostatic testing							
6B - Cleaned for oxygen service							
HP - High pressure design (10,000 psi MAWP)							

Distribuidor Autorizado CALFER
CALFER DE MÉXICO®
CONTROLES AUTOMÁTICOS INDUSTRIALES
50 ANIVERSARIO
www.calfer.com.mx 01 800 0125 742 /CalferMx
soporte.tecnico2@calfer.com.mx

ASHCROFT®
Trust the shield.®

FEATURES

- All-welded construction ensures a leak-tight, tamper-proof seal
- Provided standard with corrosion-resistant all 316L SS housings
- All welded design eliminates potential leak paths
- All 316L SS construction resists corrosive attack from a wide variety of process media

GOLD Service

400
Threaded Seal

SPECIFICATIONS

Connection Style:	400, 500: Threaded 401, 501: Threaded with flushing port
Process Connection Size:	¼ to 1½ NPT Female ¼ to 1 NPT Male
Instrument Connection Size:	¼ or ½ NPT
Pressure Rating (MAWP):	400 Seal: Up to 4,400 psi, 9,000 psi (OPT.) 500 Seal: Up to 500 psi
Added Tolererance:	±0.5% typical
Wetted Components:	Diaphragm & bottom housing
Non-Wetted Components:	Top housing: 316L, Monel®, titanium Bolts/Clamp rings: Carbon steel Nuts: SS

500
Threaded Seal

TABLE 1 - OPTIONS

Code	Option	400	401	500	501	Notes
LD	SS locking device	•	•			
PU	Pipe plug for flushing connection		•		•	Plug will match bottom housing material
HB	Hastelloy® C-276 upper housing	•	•	•	•	
SE	SS rings and bolts	•	•			1,500 psi max., 5,000 psi max. with XHP
HP	High-pressure clamp rings	•	•			9,000 psi max.; 5,000 psi max. with SE
6B	Cleaned for oxygen service	•	•	•	•	
AW	Single ½ NPT flushing connection		•		•	¾ NPT Female or smaller process connection
DB	Dual ½ NPT flushing connections		•		•	¾ NPT Female or smaller process connection
DK	Dual ¼ NPT flushing connections		•		•	
DU	Instrument welded to seal	•	•	•	•	
MQ	Positive material identification	•	•	•	•	
W1	Dye penetrant testing	•	•	•	•	
CD-5	NACE compliance certificate	•	•	•	•	
CD-6	Typical material certification	•	•	•	•	

Distribuidor Autorizado CALFER
CALFER DE MÉXICO®
CONTROLES AUTOMÁTICOS INDUSTRIALES
50 ANIVERSARIO
www.calfer.com.mx 01 800 0125 742 /CalferMx
soporte.tecnico2@calfer.com.mx

ASHCROFT®
Trust the shield.®

ORDERING CODE Example:	02	4	00	S	S	02T	XCK	HP
Process Connection Size								
02 - ¼ NPT Male (400, 500 only)	02							
04 - ½ NPT Male (400, 500 only)								
06 - ¾ NPT Male (400, 500 only)								
08 - 1 NPT Male (400, 500 only)								
25 - ¼ NPT Female								
50 - ½ NPT Female								
75 - ¾ NPT Female								
10 - 1 NPT Female								
15 - 1½ NPT Female								
Diaphragm Seal Type								
4 - 400 Series All-welded clamped seal, threaded process connection		4						
5 - 500 Series All-welded seal without clamps, threaded process connection								
Flushing Port								
00 - No Flushing port			00					
01 - With Flushing port								
Diaphragm Material								
S - 316L SS				S				
H - Hastelloy® C-276								
J - Hastelloy® C-22								
U - Tantalum, (only available with Monel® top and lower housing)								
G - Hastelloy® B								
P - K-Monel® (only available with Monel® top and lower housing)								
Ti - Titanium (only available with a Titanium top and lower housing)								
Bottom Housing Material								
S - 316L SS					S			
H - Hastelloy® C-276								
J - Hastelloy® C-22								
M - Monel® (includes Monel® top housing standard								
TI - Titanium (includes Titanium top and housing standard)								
Instrument Connection Size								
02T - ¼ NPT Female						02T		
04T - ½ NPT Female								
Options (if choosing an option(s) must include an "X")							X__	
Fill Fluid								
CG - Glycerin								
CK - Silicone SF-96							CK	
CF - Halocarbon®								
See Table 3 on page 175 for more available fill fluids								
Optional Features (see Table 1 on page 156 for option list)								
HP - High-pressure clamp rings								HP

Distribuidor Autorizado CALFER
CALFER DE MÉXICO®
CONTROLES AUTOMÁTICOS INDUSTRIALES
50 ANIVERSARIO
www.calfer.com.mx 01 800 0125 742 /CalferMx
soporte.tecnico2@calfer.com.mx

ASHCROFT®
Trust the shield.®

FEATURES

- Large diaphragm provides ample displacement for low pressure applications

740-741
Threaded Seal

SPECIFICATIONS

Connection Style:	740: threaded 741: threaded with flushing port
Process Connection Size:	¼, ½, ¾ or 1 NPT Female
Instrument Connection Size:	¼ or ½ NPT
Pressure Rating (MAWP):	up to 750 psi
Added Tolererance:	±0.5% typical
Wetted Components:	Diaphragm & bottom housing
Non-Wetted Compnents:	Top housing: 316L, Monel®, titanium Bolts: Carbon steel Nuts: SS

ORDERING CODE Example:	10	740	S	S	02T	XCK	NH
Process Connection Size							
25 - ¼ NPT Female							
50 - ½ NPT Female							
75 - ¾ NPT Female							
10 - 1 NPT Female	10						
Diaphragm Type							
740 - 740 High displacement seal, threaded process connection		740					
741 - 741 High displacement seal, threaded process connection							
Diaphragm Materials							
S - 316L SS			S				
P - Monel® 400							
U - Tantalum							
G - Hastelloy® B							
H - Hastelloy® C-276							
TI - Titanium							
Bottom Housing Materials							
S - 316L SS				S			
M - Monel® 400							
D - Carpenter 20®							
G - Hastelloy® B							
H - Hastelloy® C-276							
J - Hastelloy® C-22							
TI - Titanium							
B - Steel							
Instrument Connection Size							
02T - ¼ NPT Female					02T		
04T - ½ NPT Female							
Options (if choosing option(s) must include an "X")						X__	
Fill Fluid							
CK - Silicone SF-96						CK	
CF - Halocarbon®							
See Table 3 on page 175 for more available fill fluids							
Optional Features							
AW - Single ½ NPT flushing connection (741 only)							
DB - Dual ½ NPT flushing connections (741 only)							
DK - Dual ¼ NPT flushing connections (741 only)							
MQ - Positive material indentification							
DU - Instrument welded to seal, instrument must be like-material to top housing							
PU - Pipe plug for flushing connection. Plug will match bottom housing material. Seals with flushing connections only							
NH - Stainless steel tag wired to product							NH
HY - Hydrostatic testing							
6B - Cleaned for oxygen service							

Distribuidor Autorizado CALFER
CALFER DE MÉXICO®
CONTROLES AUTOMÁTICOS INDUSTRIALES
50 ANIVERSARIO
www.calfer.com.mx 01 800 0125 742 /CalferMx
soporte.tecnico2@calfer.com.mx

DIAPHRAGM SEALS

ISOLATION RINGS

80, 81, 82..... 160-161

ASHCROFT®
Trust the shield.®

FEATURES

- Patented Safe Quick Release™ (SQR)™ instrument removal option
- Retrofit option
- 360° isolating bladder

GOLD Service

80
Isolation Rings

81
Isolation Rings

82
Isolation Rings

SPECIFICATIONS

Process Connection	80 wafer 2″-20″ 81 bolt thru 1″-10″ 82 barrel ½ thru 2 NPT
Pressure Rating (MAWP):	80: ASME 300 Class 81: ASME 150 or 300 Class 82: 150 psi
Flange Dimensions and Pressure Ratings:	ASME B16.5 specifications
Added Tolerance:	±0.5% typical
Wetted Components:	End flanges and flexible liner
Non-wetted Components:	Center body - Carbon steel, 316 SS

TABLE 2 – PROCESS CONNECTION TABLE

Process Connection Code (Nominal Size)	80 (Wafer Flange)	81 (Bolt Thru Flange)	82 (Threaded Ring NPT)
50 (½″)			•
01 (1″)		•	•
15 (1½″)		•	•
02 (2″)	•	•	•
03 (3″)	•	•	
04 (4″)	•	•	
05 (5″)	•	•	
06 (6″)	•	•	
08 (8″)	•	•	
10 (10″)	•	•	
12 (12″)	•		
14 (14″)	•		
16 (16″)	•		
18 (18″)	•		
20 (20″)	•		

CONTACT FACTORY FOR ADDITIONAL SIZES

Distribuidor Autorizado CALFER
CALFER DE MÉXICO®
CONTROLES AUTOMÁTICOS INDUSTRIALES
50 ANIVERSARIO
www.calfer.com.mx 01 800 0125 742 /CalferMx
soporte.tecnico2@calfer.com.mx

ASHCROFT®
Trust the shield.®

ORDERING CODE Example:	82	50	E	B	B	02T	N	000	XCK	H3	NH
Seal Type											
80 - Wafer style isolation ring											
81 - Bolt thru style isolation ring											
82 - Barrel style threaded isolation ring	82										
Process Connection Size											
50 - ½″ (see table 2 on page 160)		50									
Inner Flexible Wall											
E - Buna-N®			E								
T - PTFE (available in 2″ to 10″)											
Y - Viton®											
R - Natural Rubber											
P - EPDM											
End Flange Material											
B - Carbon Steel				B							
S - 316L SS											
K - CPVC (available in 1″ and 1½″ 81 only)											
F - PVDF (sizes up to 2″)											
Body Material											
B - Carbon Steel					B						
S - 316L SS											
Instrument Connection Size											
02T ¼ NPT Female						02T					
04T - ½ NPT Female (rings are tapped with ¼ NPT connections; 04T connection utilizes ¼-½ NPT adapter)											
Instrument Removal Option											
N - Direct-mount							N				
V - Needle valve											
Q - Safe Quick Release™ (SQR™)											
Z - Needle valve and SQR™ (Requires 02T instrument connection)											
Flange Rating											
150 - 150-class ASME (81 only)											
300 - 300-class ASME (81 only)											
000 - Wafer (80) and Barrel (82) isolation rings								000			
Options (if choosing option(s) must include an "X")									X__		
Fill Fluid											
CG - Glycerin											
CK - Silicone SF-96									CK		
CF - Halocarbon®											
See table 3 on page 175 for more available fill fluids											
Multiple Instrument Assemblies (contact factory for additional arrangements or custom orientations.)											
H3 - ¼ NPT gauge/ ¼ NPT transducer/ 02T isolation ring										H3	
H5 - ½ NPT gauge/ ½ NPT switch/ 04T isolation ring											
H6 - ½ NPT gauge/2 ½ NPT switches/ 02T isolation ring											
H7 - ¼ NPT gauge/ ¼ NPT switch/ 02T isolation ring											
Optional Features											
IR - Retrofit flanges (custom flange widths for drop-in replacements (80 and 81 only)											
NH - SS tag wired to ring											NH
Q8 - Elbow for vertical pipe installation (02T connection only)											

Distribuidor Autorizado CALFER
CALFER DE MÉXICO®
CONTROLES AUTOMÁTICOS INDUSTRIALES
50 ANIVERSARIO
www.calfer.com.mx 01 800 0125 742 /CalferMx
soporte.tecnico2@calfer.com.mx

DIAPHRAGM SEALS

FLANGED SEALS

102-103..... 164-165
202-203..... 164-165
302-303..... 164-165
402-403..... 166-167
702-703..... 166, 168
DF Flanged 169-170

ASHCROFT®
Trust the shield.®

FEATURES

- A thin PTFE gasket between the diaphragm and bottom housing ensures a leak-tight, corrosion resistant seal
- Nickel-plated carbon steel flanges provided standard with option for 316L SS flanges
- Modular design allows for a suitable combination of wetted and non-wetted materials for every application

GOLD Service

102-103
Flanged Seal

SPECIFICATIONS

Connection Style:	102, 202, 302: flanged 103, 203, 303: flanged with flushing port
Process Connection Size:	½, ¾, 1, 1½, 2 or 3 NPS
Instrument Connection Size:	¼ or ½ NPT
Pressure Rating (MAWP):	Dictated by ASME flange ratings (Table 5 on page 175)
Added Tolerance:	±0.5% typical
Wetted Components:	Diaphragm & bottom housing
Non-Wetted Components:	Top housing: Carbon steel Flange ring: Carbon steel

TABLE 1 - DIAPHRAGM MATERIALS

Material	Letter Code	100 Series	200 Series	300 Series	Notes
304L SS	C	•	•		
Carpenter 20®	D	•	•		
904L SS	F		•		
Hastelloy® B	G	•	•		
Hastelloy® C-276	H	•	•		
Hastelloy® C-22	J	•	•		
Kalrez®	K		•	•	Temp limits: 30°F to 212°F Max .pressure: 500 psi
Nickel	N	•	•		
Monel® 400	P	•	•		200-series must be ordered with XYM Monel® top housing option
316L SS	S	•	•		
PTFE	T		•	•	Temp limits: -40°F to 400°F
Titanium	Ti		•		Includes titanium top housing
Gold Plated 316L SS	W	•			
Viton®	Y		•	•	Temp limits: -40°F to 350°F Max. pressure: 500 psi

TABLE 2 - BOTTOM HOUSING MATERIALS

Material	Letter Code	Notes
Super Duplex 2507	A	
Steel	B	
Halar-coated Monel®	BH	Not available with flushing connections
304L SS	C	
Carpenter 20®	D	
347 SS	E	
904L SS	F	
Hastelloy® B	G	
Hastelloy® C-276	H	
Hastelloy® C-22	J	
PVDF	KY	Not available with flushing connection Available only with 150-class flange Maximum pressure: 200 psi Maximum temperature: 180°F
Incoloy® 825	L	
Monel® 400	M	
Nickel	N	
321 SS	Q	
316L SS	S	
Tantalum-clad 316L SS	SU	Not available with flushing connection
PTFE	T	Not available with flushing connection Available only with 150-class flange Maximum pressure: 270 psi Maximum temperature: 150°F
Titanium	Ti	
PVC	V	Not available with flushing connection Available only with 150-class flange Maximum pressure: 75 psi Maximum temperature: 100°F
Inconel® 625	W	
Duplex 2205	Z	

Distribuidor Autorizado CALFER
CALFER DE MÉXICO®
CONTROLES AUTOMÁTICOS INDUSTRIALES
50 ANIVERSARIO
www.calfer.com.mx 01 800 0125 742 /CalferMx
soporte.tecnico2@calfer.com.mx

ASHCROFT®
Trust the shield.®

ORDERING CODE Example:	50	1	02	C	C	02T	XCK	SE	300	RF
Process Connection Size										
50 - ½ NPS	50									
75 - ¾ NPS										
10 - 1 NPS										
15 - 1½ NPS										
20 - 2 NPS										
30 - 3 NPS										
Diaphragm Type										
1 - 100-series Metallic capsule diaphragm threaded into top housing		1								
2 - 200-series Diaphragm welded (metallic) or bonded (elastomeric) to top housing										
3 - 300-series Elastomeric diaphragm clamped between upper & lower housing										
Bottom Housing Options										
02 - Flanged process connection, without flushing port			02							
03 - Flanged process connection, with flushing port										
Diaphragm Materials										
C - 304L SS				C						
See Table 1 on page 164										
Bottom Housing Materials										
C - 304L SS					C					
See Table 2 on page 164										
Instrument Connection Size										
02T - ¼ NPT						02T				
04T - ½ NPT										
Options (if choosing option(s) must include an "X")							X__			
Fill Fluids										
CG - Glycerin										
CK - Silicone SF-96							CK			
CF - Halocarbon®										
See Table 3 on page 175 for more available fill fluids										
Optional Features										
AW - Single ½" flushing connections (03 bottom housing only)										
DB - Dual ½" flushing connections (03 bottom housing only)										
DK - Dual ¼" flushing connections (03 bottom housing only)										
PU - Pipe plug for flushing connection										
YM - Monel® 400 top housing										
YT - 316L SS top housing										
SB - SS clamping bolts										
SE - SS flange rings and bolts								SE		
LD - SS locking device										
NH - SS instrument tag										
DU - Instrument welded to top housing										
MQ - Positive material identification										
6B - Cleaned for oxygen service										
CD-5 - NACE compliance certificate										
Flange Rating (refer to table 5 on page 175 for applicable pressure rating)										
150 - 150 Class ASME										
300 - 300 Class ASME									300	
600 - 600 Class ASME										
900 - 900 Class ASME										
1500 - 1500 Class ASME										
2500 - 2500 (Available on request)										
Flange Types (contact Ashcroft for alternate flange types)										
RF - Raised Face										RF
RJ - Ring Joint										
FF - Flat Face										

Distribuidor Autorizado CALFER
CALFER DE MÉXICO®
CONTROLES AUTOMÁTICOS INDUSTRIALES
50 ANIVERSARIO
www.calfer.com.mx 01 800 0125 742 /CalferMx
soporte.tecnico2@calfer.com.mx

ASHCROFT®
Trust the shield.®

402-403 Flanged Seal

FEATURES

- All-welded construction ensures a leak-tight, tamper-proof seal
- Provided standard with corrosion-resistant all 316L SS construction

SPECIFICATIONS

Connection Style:	402: Flanged 403: Flanged with flushing port
Process Connection Size:	½, ¾, 1, 1½, 2, 3 NPS
Instrument Connection Size:	¼, ½ NPT
Pressure Rating (MAWP):	Dictated by ASME flange ratings (see table 5 on page 175)
Added Tolerance:	±0.5% typical
Wetted Components:	Diaphragm & bottom housing
Non-Wetted Components:	Top housing: 316L SS Flange: Carbon steel

ORDERING CODE ON PAGE 167

402-403
Flanged Seal

702-703 Flanged Seal

FEATURES

- Large diaphragm provides ample displacement for low pressure applications
- Continuous duty design prevents loss of process media in the event of an instrument failure

SPECIFICATIONS

Connection Style:	702: Flanged 703: Flanged with flushing port
Process Connection Size:	½, ¾, 1, 1½, 2 or 3 NPS
Instrument Connection Size:	¼ or ½ NPT
Pressure Rating (MAWP):	Dictated by ASME flange ratings (see table 5 on page 175)
Added Tolerance:	±0.5% typical
Wetted Components:	Diaphragm & bottom housing
Non-Wetted Components:	Top housing: 316L SS Bolts: Carbon steel Flange studs: Carbon steel

ORDERING CODE ON PAGE 168

702-703
Flanged Seal

Distribuidor Autorizado CALFER
CALFER DE MÉXICO®
CONTROLES AUTOMÁTICOS INDUSTRIALES
50 ANIVERSARIO
www.calfer.com.mx 01 800 0125 742 /CalferMx
soporte.tecnico2@calfer.com.mx

ASHCROFT®
Trust the shield.®

ORDERING CODE Example:	50	402	S	S	02T	XCK	PU	150	RF
Process Connection Size									
50 - ½ NPS	50								
75 - ¾ NPS									
10 - 1 NPS									
15 - 1½ NPS									
20 - 2 NPS									
30 - 3 NPS									
Seal Type									
402 - All-welded seal, flanged process connection		402							
403 - All-welded seal									
Diaphragm Material									
S - 316L SS (Supplied Standard)			S						
H - Hastelloy® C-276									
J - Hastelloy® C-22									
U - Tantalum (Only available with Monel® top and lower housing)									
G - Hastelloy® B									
P - K-Monel® (Only available with Monel® top and lower housing)									
TI - Titanium (Only available with a Titanium top and lower housing)									
Bottom Housing Material									
S - 316L SS				S					
H - Hastelloy® C-276									
J - Hastelloy® C-22									
M - Monel® (Includes Monel® top housing standard)									
Ti - Titanium (Includes Titanium top housing standard)									
Instrument Connection Size									
02T - ¼ NPT Female					02T				
04T - ½ NPT Female									
Options (if choosing option(s) must include an "X")						X__			
Fill Fluid									
CG - Glycerin						CG			
CK - Silicone SF-96									
CF - Halocarbon®									
See Table 3 on page 175 for more available fluids									
Optional Features									
PU - Pipe plug for flushing connection (403 only)							PU		
SE - SS rings and bolts									
6B - Cleaned for oxygen service									
DB - Dual ½ NPT flushing connections (403 only)									
DU - Instrument welded to seal									
W1 - Dye penetrant testing									
Flange Rating									
150 - 150 class ASME								150	
300 - 300 class ASME									
600 - 600 class ASME									
900 - 900 class ASME									
1500 - 1500 class ASME									
2500 - 2500 class ASME(available on request)									
Flange Types - (contact Ashcroft for alternate flange types)									
RF - Raised face									RF
RJ - Ring joint									
FF - Flat face									

Distribuidor Autorizado CALFER
CALFER DE MÉXICO®
CONTROLES AUTOMÁTICOS INDUSTRIALES
50 ANIVERSARIO
www.calfer.com.mx 01 800 0125 742 /CalferMx
soporte.tecnico2@calfer.com.mx

ASHCROFT®
Trust the shield.®

ORDERING CODE Example:	50	702	S	S	02T	XCK	PU	150	RF
Process Connection Size									
50 - ½ NPS	50								
75 - ¾ NPS									
10 - 1 NPS									
15 - 1½ NPS									
20 - 2 NPS									
30 - 3 NPS									
Seal Type									
702 - High displacement seal, flanged process connection		702							
703 - High displacement seal, flanged process connection with flushing connection									
Diaphragm Material									
S - 316L SS (Supplied Standard)			S						
P - Monel® 400									
U - Tantalum									
G - Hastelloy® B									
H - Hastelloy® C-276									
Ti - Titanium									
Bottom Housing Material									
S - 316L SS				S					
M - Monel® 400									
D - Carpenter 20®									
G - Hastelloy® B									
H - Hastelloy® C-276									
J - Hastelloy® C-22									
TI - Titanium									
B - Steel									
Instrument Connection Size									
02T - ¼ NPT Female					02T				
04T - ½ NPT Female									
Options (if choosing option(s) must include an "X")						X__			
Fill Fluid									
CK - Silicone SF-96						CK			
CF - Halocarbon®									
See Table 3 on page 175 for more available fluids									
Optional Features									
PU - Pipe plug for flushing connection (703 only)							PU		
DU - Welded to top housing									
SB - Stainless steel bolts and studs									
6B - Cleaned for oxygen service									
Flange Rating									
150 - 150 class ASME								150	
300 - 300 class ASME									
600 - 600 class ASME									
Flange Types (contact Ashcroft for alternate flange types)									
RF - Raised Face									RF
RJ - Ring Joint									
FF - Flat Face									

Distribuidor Autorizado CALFER
CALFER DE MÉXICO®
CONTROLES AUTOMÁTICOS INDUSTRIALES
50 ANIVERSARIO
www.calfer.com.mx 01 800 0125 742 /CalferMx
soporte.tecnico2@calfer.com.mx

DF Flush Flanged Seal

ASHCROFT®
Trust the shield.®

FEATURES

- Engineered to minimize cost when exotic wetted materials are required
- Available in a wide range of wetted materials
- Continuous-duty construction contains the process in the event of instrument failure
- Flushing diaphragm prevents clogging
- Compact design eliminates need for lower housing

SPECIFICATIONS

Connection Style:	Flanges, flush diaphragm
Process Connection Size:	1, 1½, 2, 3 or 4 NPS
Instrument Connection Size:	¼ or ½ NPT Female
Flange Ratings:	ASME 150, 300, 600, 900, 1500, 2500
Flange:	Raised face or ring joint
Added Tolerance:	±0.5% typical
Wetted Components:	Diaphragm
Non-Wetted Components:	Top housing and flange: 316L SS

DF
Flanged Seal

Distribuidor Autorizado CALFER
CALFER DE MÉXICO®
CONTROLES AUTOMÁTICOS INDUSTRIALES
50 ANIVERSARIO
www.calfer.com.mx 01 800 0125 742 /CalferMx
soporte.tecnico2@calfer.com.mx

ASHCROFT®
Trust the shield.®

ORDERING CODE Example:	10	A	DF	S	S	04T	150	RF	XCK	MQ
Process Connection Size										
10 - 1 NPS	10									
15 - 1½ NPS										
20 - 2 NPS										
30 - 3 NPS										
40 - 4 NPS										
Flange Dimension Specification										
A - ASME B16.5		A								
Seal Type										
DF - Flush Diaphragm			DF							
Diaphragm Material										
S - 316L SS				S						
P - Monel® 400										
U - Tantalum										
H - Hastelloy® C-276										
SH - Halar®-coated 316L SS										
ST - Teflon®-coated 316L SS										
W - Gold-plated 316L SS										
Flange and Top Housing Material										
S - 316L SS					S					
Instrument Connection Size										
02T - ¼ NPT Female						04T				
04T - ½ NPT Female										
Flange Rating										
150 - 150 class ASME							150			
300 - 300 class ASME										
600 - 600 class ASME										
900 - 900 class ASME										
1500 - 1500 class ASME										
2500 - 2500 class ASME										
Flange Types (contact Ashcroft for alternate flange types)										
RF - Raised Face								RF		
RJ - Ring Joint										
Options (if choosing option(s) must include an "X")									X__	
Fill Fluid										
CK - Silicone 50cST									CK	
DJ - Silicone 10cST										
CF - Halocarbon®										
See Table 3 on page 175 for more available fill fluids										
Optional Features										
6B - Cleaned for oxygen service										
DU - Instrument welded to seal										
NH - Wired SS tags										
C3 - EN 3.1 Traceability										
CD5 - NACE certificate										
MQ - Positive material identification										MQ
AT - ATEX approval										

Distribuidor Autorizado CALFER
CALFER DE MÉXICO®
CONTROLES AUTOMÁTICOS INDUSTRIALES
50 ANIVERSARIO
www.calfer.com.mx 01 800 0125 742 /CalferMx
soporte.tecnico2@calfer.com.mx

DIAPHRAGM SEALS

IN-LINE

104/204 172-173
105/205 172-173
106/206, ... 172-173
107/207 172-173
108/208 172-173
320 174
Flange Ratings and Fill Fluids 175
Product Selection Informatiom 176

ASHCROFT®
Trust the shield.®

FEATURES

- Available with diaphragm welded or bonded to top housing or removable threaded capsule diaphragms
- Flow through design reduces the possibility of clogging; ideal for viscous media, slurries, and emulsions
- Large 2½″ diaphragm provides exceptional displacement for use with most Ashcroft instrumentation

GOLD Service

104/204
In-Line

105/205
In-Line

106/206
In-Line

107/207
In-Line

108/208
In-Line

SPECIFICATIONS

Connection Style:	104/204 105/205 106/206 107/207 108/208	In-line threaded Saddle Weld In-line flange In-line socket In-line butt weld
Process Connection Size:	See Table 4 on page 173	
Instrument Connection Size:	¼ or ½ NPT	
Pressure Ratings (MAWP):	2,500 psi	
Flange Ratings:	106/206: 150 class	
Added Tolerance:	±0.5% typical	
Wetted Components:	Diaphragm & bottom housing	
Non-Wetted Components:	Top housing: Bolts/Clamp rings:	Carbon steel Carbon steel

TABLE 1 - DIAPHRAGM MATERIALS

Material	Letter Code	100 Series	200 Series	Notes
304L SS	C	•	•	
Carpenter 20®	D	•	•	
904L SS	F		•	
Hastelloy® B	G	•	•	
Hastelloy® C-276	H	•	•	
Hastelloy® C-22	J	•	•	
Kalrez®	K		•	Temp limits: 30°F to 212°F Max. pressure: 500 psi
Nickel	N	•	•	
Monel® 400	P	•	•	200-series must be ordered with XYM Monel® top housing option
316L SS	S	•	•	
PTFE	T		•	Temp limits: -40°F to 400°F
Titanium	Ti		•	Includes titanium top housing
Gold Plated 316L SS	W	•		
Viton®	Y		•	Temp limits: -40°F to 350°F Max. pressure: 500 psi

TABLE 2 - BOTTOM HOUSING MATERIALS

Material	Letter Code
Steel	B
304L SS	C
316L SS	S
Hastelloy® B	G
Hastelloy® C-22	J
Hastelloy® C-276	H
Carpenter 20®	D
Monel® 400	M
Mounting Hardware only	X

Distribuido
CALFER DE MÉXICO®
CONTROLES AUTOMÁTICOS INDUSTRIALES
50 ANIVERSARIO
www.calfer.com.mx 01 800 0125 742 /CalferMx
soporte.tecnico2@calfer.com.mx

ASHCROFT®
Trust the shield.®

TABLE 4 – PROCESS CONNECTIONS

Ordering Code (Nominal Size)	104/204 (In-Line) Threaded NPT	105/205 (Saddle Weld) Code as 30 for weld-in to 3″ pipe. Code as 40 for weld-in to any pipe 4″ and larger.	106/206 (In-Line Flanged)	107/207 (In-Line Socket Weld)	108/208 (In-Line Butt Weld)
25 (¼″)	•			•	
50 (½″)	•		•	•	•
75 (¾″)			•	•	•
10 (1″)			•	•	•
15 (1½″)			•	•	•
20 (2″)			•	•	•
30 (3″)		•	•		
40 (4″)		•	•		
60 (6″)			•		
80 (8″)			•		

ORDERING CODE Example:	10	1	06	S	S	02T	XCG	SE	150	RF
Process Connection Size										
See Table 4 above	10									
Diaphragm Type										
1 - 100-series: Capsule diaphragm threaded into top housing		1								
2 - 200-series: Diaphragm welded (metallic) or bonded (elastomeric) to top housing										
Lower Housing Type										
04 - In-line threaded lower housing (dual female NPT connections)										
05 - Weld-in saddle seal										
06 - In-line flanged lower housing (dual ASME flange connections)			06							
07 - In-line socket weld (dual sockets for weld-in to piping)										
08 - In-line butt weld (dual pipe stubs for weld-in to piping)										
Diaphragm Materials										
S - 316L SS				S						
See Table 1 on page 172										
Bottom Housing Material										
S - 316L SS					S					
See table 2 on page 172										
Instrument Connection Size										
02T - ¼ NPT Female instrument connection						02T				
04T - ½ NPT Female instrument connection										
Options (if choosing option(s) must include an "X")							X__			
Fill Fluid										
CG – Glycerin							CG			
CK - Silicone SF-96										
CF – Halocarbon®										
See Table 3 on page 175 for more available fill fluids										
Optional Features										
YM - Monel® 400 top housing (must be ordered with Monel® or tantalum diaphragm)										
YT - 316L SS top housing										
SE - SS rings and bolts								SE		
LD - SS locking device										
NH - SS tag										
NN - Paper instrument tag										
DU - Instrument Welded to top housing (instrument connection must be like-material to top housing)										
MQ - Positive material identification										
6B - Cleaned for oxygen service										
CD-6 - NACE compliance certificate										
Flange Rating (106/206 seals only)										
150 - 150 class ASME									150	
300 - 300 class ASME										
Flange Tyoe (106/206 seals only)										
RF - Raised Face (contact Ashcroft for alternate flange form availability)										RF

Distribuidor Autorizado CALFER
CALFER DE MÉXICO®
CONTROLES AUTOMÁTICOS INDUSTRIALES
50 ANIVERSARIO
www.calfer.com.mx 01 800 0125 742 /CalferMx
soporte.tecnico2@calfer.com.mx

320 Flush Quick Connect Seal

ASHCROFT®
Trust the shield.®

FEATURES

- All-welded stainless construction
- Easy dismantling and reassembly
- Compatible with Tri-Clover and Cherry Burrell® S line connection

GOLD Service

SPECIFICATIONS	
Connection Style:	320 quick connect
Process Connection:	1½″, 2″
Instrument Connection Size:	¼ or ½ NPT Male
Pressure Rating (MAWP):	1,000 psi
Added Tolerance:	±0.5% typical
Wetted Materials:	Diaphragm 316L SS
Non Wetted Materials:	Top Housing: 316L SS

320
Quick-Connect Seal

ORDERING CODE	Example:	15	320	SX	02T	XCG	NH
Process Connection Size							
15 - 1½″ Quick-connect		15					
20 - 2″ Quick-connect							
Seal Type							
320 - Quick Connect Seal			320				
Diaphragm Material							
SX - 316L SS				SX			
Instrument Connection Size							
02T - ¼ NPT Female					02T		
04T - ½ NPT Female (only available on 2″ Quick-connect process connection)							
Options (if choosing option(s) must include an "X")						X__	
Fill Fluid							
CG - Glycerin						CG	
CK - Silicone SF-96							
CF - Halocarbon®							
See Table 3 on page 175 for more available fill fluids							
Optional Features							
NH - SS instrument tag							NH
NN - Paper instrument tag							
MQ - Positive material identification							

Distribuidor Autorizado CALFER
CALFER DE MÉXICO®
CONTROLES AUTOMÁTICOS INDUSTRIALES
50 ANIVERSARIO
www.calfer.com.mx 01 800 0125 742 /CalferMx
soporte.tecnico2@calfer.com.mx

TABLE 3 - FILL FLUIDS

Fill Fluid	Temperature	Viscosity (cSt at RT)	Variation Code	Notes
Sylltherm® XLT	-150°F to 500°F (-100°C to 260°C)	1.4	CC	Low temperature applications
Glycerin (food grade)	0°F to 400°F (-18°C to 204°C)	1,300	CG	Direct-mounting only. Not for use with vacuum service
Silicone SF®-96	-40°F to 500°F (-40°C to 260°C)	50	CK	
Halocarbon® 4.2	-70°F to 300°F (-57°C to 199°C)	4.2	CF	For use with oxygen/ oxidizing process media
50/50 Ethylene Glycol/Water	-25°F to 190°F (-32°C to 88°C)	2.9	CT	
Polypropylene Glycol	-50°F to 325°F (-46°C to 163°C)	54	CV	
Food-grade Silicone	-40°F to 500°F (-40°C to 260°C)	350	CZ	
DC®-200 Silicone	-40°F to 500°F (-40°C to 260°C)	10	DJ	
Distilled Water	40°F to 185°F (4°C to 85°C)	0.9	FJ	
Ethylene Glycol	20°F to 325°F (-7°C to 163°C)	14	FK	
50/50 Glycerin/Water	15°F to 200°F (-9°C to 93°C)	30	GH	
80/20 Glycerin/Water	15°F to 225°F (-9°C to 107°C)	270	GR	
Slytherm® 800	-40°F to 750°F (-40°C to 400°C)	10	HA	High temperature applications
Calflo® AF	-20°F to 600°F (-29°C to 316°C)	60	KF	
Mineral Oil	10°F to 400°F (-12°C to 204°C)	75	MY	
Neobee® M-20	5°F to 400°F (-15°C to 204°C)	9.5	NM	Food grade
95/5 Water/Propylene Glycol	40°F to 185°F (4°C to 85°C)	1.0	PY	

TABLE 5 - FLANGE RATINGS

CARBON STEEL FLANGE Maximum Allowable Pressure (psi)						
Temp. (°F)	FLANGE CLASS					
	150	300	600	900	1500	2500
<100	285	740	1480	2220	3705	6170
200	260	675	1350	2025	3375	5625
300	230	655	1315	1970	3280	5470
400	200	635	1270	1900	3170	5280
500	170	600	1200	1795	2995	4990
600	140	550	1095	1640	2735	4560
650	125	535	1075	1610	2685	4475
700	110	535	1065	1600	2665	4440
750	95	505	1010	1510	2520	4200
800	80	410	825	1235	2060	3430
850	65	270	535	805	1340	2230
900	50	170	345	515	860	1430
950	35	105	205	310	515	860
1000	20	50	105	155	280	430

STAINLESS STEEL FLANGE Maximum Allowable Pressure (psi)						
Temp. (°F)	FLANGE CLASS					
	150	300	600	900	1500	2500
<100	275	750	1440	2160	3600	6000
200	230	600	1200	1800	3000	5000
300	205	540	1075	1615	2690	4480
400	190	495	995	1490	2485	4140
500	170	465	930	1395	2330	3880
600	140	440	885	1325	2210	3680
650	125	430	865	1295	2160	3600
700	110	420	845	1265	2110	2520
750	95	415	825	1240	2065	3440
800	80	405	810	1215	2030	3380
850	65	395	790	1190	1980	3300
900	50	390	780	1165	1945	3240
950	35	380	765	1145	1910	3180
1000	20	355	710	1065	1770	2950

Distribuidor Autorizado CALFER
CALFER DE MÉXICO®
CONTROLES AUTOMÁTICOS INDUSTRIALES
50 ANIVERSARIO
www.calfer.com.mx 01 800 0125 742 /CalferMx
soporte.tecnico2@calfer.com.mx

ASHCROFT®
Trust the shield.®

Introduction

A diaphragm seal is a device that is attached to the inlet connection of a pressure instrument to isolate it from the process media. The area between the diaphragm and the pressure sensing element is solidly filled with a suitable liquid, called the fill fluid. Displacement of the diaphragm compresses the fill fluid, which transmits pressure changes to the pressure instrument.

Fill Fluid

Ashcroft offers a variety of fill fluids which must be compatible with the process temperature. Glycerin and Silicone are the most commonly used fill fluids. However, when the process media is a strong oxidizing agent such as oxygen, chlorine, nitric acid and hydrogen peroxide the fill fluid must be Halocarbon®. Strong oxidizing agents can combine with Glycerin or Silicone which may cause a fire or violent reactions.

Leaks

The entire filled portion of the diaphragm seal and pressure instrument must be leak tight. Any loss of fill fluid will result in significant errors.

Accuracy and Temperature Errors

The addition of a diaphragm seal to an instrument will typically degrade its accuracy by 0.5%, unless stated otherwise. In addition, changes in ambient temperatures will introduce errors due to thermal expansion and contraction of the fill fluid.

Warning

All seal components should be selected considering process and ambient operating conditions to prevent misapplication. Improper application could result in failure and possible injury or property damage.

Volumetric Displacement

Volumetric displacement of the seal must be greater than the attached instrument.

Design

Ashcroft diaphragm seal designs are comprised of a top housing, a diaphragm and bottom housing. The top housing has a standard fill/bleed connection allowing the assembly to be evacuated and properly filled. Removal of the bleed screw will cause loss of system fill making the assembly inoperable. The diaphragm is in direct contact with the process media.

Clamped Design

These include Types 100, 200, 300 and 700 series. The Type 100 series diaphragm is threaded into the top housing. The top housing, diaphragm and lower housing are then clamped as an assembly. Type 200 series diaphragm is either welded or bonded to the top housing. The top housing and diaphragm assembly are clamped together to the lower housing. The Type 200 series is offered with both metallic diaphragms as well as elastomers. For Types 200 and 700 series the materials of both diaphragm and top housing should be like materials. On Type 300 series the top housing, diaphragm and bottom housing are clamped together. Note that the Type 300 series is only offered with Kalrez®, Viton® or Teflon® diaphragms. The Type 700 series diaphragm is welded to the top housing. It is offered with metallic diaphragms only and used in low pressure applications.

Clamp Ring standard material is black epoxy-painted carbon steel. Stainless steel clamp rings and high pressure clamp rings are available.

Upper Flange Ring bolt patterns are per ASME 16.5. Nickel plated carbon steel is standard. Stainless steel flanges are optional.

All-Welded Design

These include Types 400, 500, 510, 311, 310, 330 and 320 series. Types 400, 500 and 510 are comprised of a top housing, a diaphragm and bottom housing. These three components are welded together. 316 Stainless Steel top housing is standard. Other top housing materials are available. For Monel® diaphragm and bottom housings, the top housing is Monel®. Titanium diaphragms must be welded to Titanium top housing and bottom housing. Type 400 series is furnished with clamp rings. High pressure clamp rings are an available option.

Pressure Ratings

The maximum allowable working pressure of the seal must be greater than the maximum pressure of the pressure sensing instrument. Maximum allowable working pressure for all materials decreases as temperature increases. Plastic bottom housings will not withstand same pressures as their metal equivalents. Flanged seals are limited to the maximum allowable working pressure of the flange as per ASME/ANSI B16.5.

The bottom housing and diaphragm are in direct contact with the process, therefore, they must be compatible with the process media. Refer to Ashcroft's Corrosion Guide for more information on material compatibility.

Distribuidor Autorizado CALFER
CALFER DE MÉXICO®
CONTROLES AUTOMÁTICOS INDUSTRIALES
50 ANIVERSARIO
www.calfer.com.mx 01 800 0125 742 /CalferMx
soporte.tecnico2@calfer.com.mx

TEMPERATURE INSTRUMENTS

BIMETAL THERMOMETERS

EI, CI, EL Bimetal..... 178-179
Product Selection Information 180

Distribuidor Autorizado CALFER
CALFER DE MÉXICO®
CONTROLES AUTOMÁTICOS INDUSTRIALES
50 ANIVERSARIO
www.calfer.com.mx 01 800 0125 742 /CalferMx
soporte.tecnico2@calfer.com.mx

ASHCROFT®
Trust the shield.®

FEATURES

- Robust hermetically sealed all SS unit
- External adjustment, EI and EL only
- Maxivision dial for precise readings (minimize parallax reading errors)
- Silicone dampened coil for vibration dampening and improved response time
- 5-Year warranty

GOLD Service

EI Bimetal
5″ dial size

EI Bimetal
3″ dial size

SPECIFICATIONS

Accuracy:	±1% of span ASME B40.200 (B40.3 Grade A)
Stem Length:	EI: 2″ to 60″ CI: 2″ to 24″ EL: 2″ to 36″
Process Connection:	¼ NPT Fixed ½ NPT Fixed ½ NPT Union ½ NPT Adjustable Union Plain Pointed Plain (N/A for all configurations)
Stem diameter:	0.250″
Case & Stem:	304 SS, hermetically sealed
Connection Location:	Every Angle (3″ & 5″ only), Rear and Lower (N/A on 2″)
Pointer:	Black
Window:	EI & CI: Heavy-duty glass, plastic or shatter-proof glass (OPT.). EL: Durable polycarbonate

TEMPERATURE RANGES

		Dual scales are available in 3″ & 5″ dial sizes in the following ranges:	
°F	**°C**	**Inner (°F)**	**Outer (°C)**
–80/120	–50/50	–80/120	–60/50
–20/120[2]	–10/110	–40/120	–40/50
–40/120	–20/120	–40/160	–40/170
30/130[2]		–20/120	–30/50[2]
0/100[2]	0/50[1]		
0/200	0/100	0/200	–20/90
20/120[2]	10/150[1]		
0/250	0/200	0/250	–20/120
50/300	0/300[1]	30/130	0/55[2]
50/400	0/400	50/300	10/150
50/550	50/450[1]	50/400	0/400
200/700[1]	100/500[1]	50/550	10/290
100/800[1]		100/800	50/400[1]
		200/700	100/370[1]
200/1,000[1]			
		200/1,000	100/550[1] [3]

LIQUID FILLED TEMPERATURE RANGES

°F	**°C**
–40/160	–40/100
–20/120[2]	–20/120
30/130[2]	–10/110
0/200	0/50[2]
0/250	0/100
50/300	10/150
50/400	0/200
50/550	0/300

Liquid filled ranges are available as single scale or dual scale.

NOTES:

[1] Minimum stem length for these ranges is 4″.

[2] Minimum stem length for lower connection and Everyangle is 4″.

[3] Satisfactory for continuous service up to 800°F or 425°C. Can be used for intermittent service from 800 to 1000°F, or 425 to 500°C. Use Ashcroft Duratemp® thermometers for ranges above and below those listed above.

Contact factory for ranges not shown

RoHS COMPLIANT

Distribuidor Autorizado CALFER
CALFER DE MÉXICO®
CONTROLES AUTOMÁTICOS INDUSTRIALES
50 ANIVERSARIO
www.calfer.com.mx 01 800 0125 742 /CalferMx
soporte.tecnico2@calfer.com.mx

ORDERING CODE Example:	30CI	60	R	060	0/200°F	XSG
Dial Size and Model						
20CI - 2″ Tamper resistant bimetal						
30CI - 3″ Tamper resistant bimetal	30CI					
50CI - 5″ Tamper resistant bimetal						
20EI - 2″ External adjust bimetal						
30EI - 3″ External adjust bimetal						
50EI - 5″ External adjust bimetal						
30EL - 3″ External adjust liquid filled bimetal						
50EL - 5″ External adjust liquid filled bimetal						
Stem and Connection						
40 - Plain-no connection						
42 - ½ NPT Union (EL & EI every angle only)						
50 - Pointed stem - no connection						
60 - ½ Fixed NPT for 3 & 5″ but ¼ fixed NPT for 2″		60				
70 - ½ NPT Adjustable Union (EL & EI every angle only)						
Connection Location						
R - Rear connection			R			
L - Lower connection, N/A on 2″ or with EL						
E - Every angle connection (EL & EI only)						
Stem Length						
025 - 2½″						
040 - 4″						
060 - 6″				060		
090 - 9″						
120 - 12″						
150 - 15″						
180 - 18″						
240 - 24″						
Temperature Ranges (see table on page 178)						
0/200°F					0/200°F	
Options - (if choosing an option(s) must include an "X")						X_ _
C4 - Individual calibration certification						
CS - Dual scale						
DM - Dial marking						
NN - Paper tag						
NH - SS tag						
PD - Plastic window						
SG - Shatterproof glass						SG
3B - ⅜″ stem diameter with ½ NPT						
02 - ¼ NPT when ½ NPT standard (only available on rear connection)						
S1 - Silicone free						
YW - 316 SS construction 5″ EI/EL everyangle connection						

ASHCROFT®
Trust the shield.®

Product Selection Information
Bimetal Thermometers

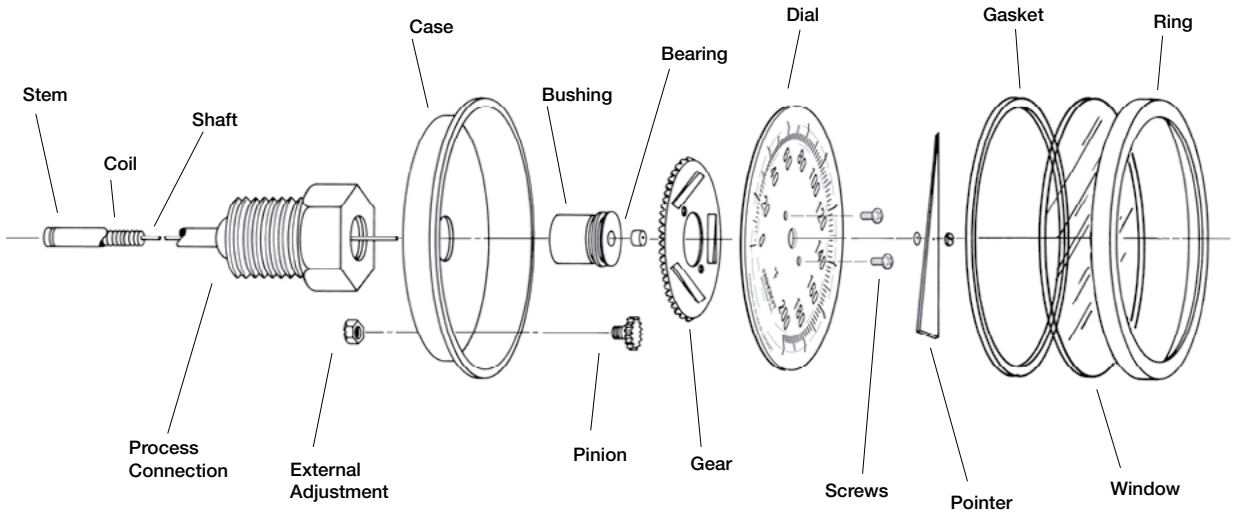

Warning: When selecting all bimetal thermometers, consider the media and the ambient operating conditions. Improper application can be detrimental to the thermometer and can cause failure and possibly personal injury or property damage. Inaccuracies resulting from improper setting of the external adjustment by the user may cause personal injury or property damage. Consult ASME B40.200 (B40.3) for guidance in selection and use of bimetal thermometers.

Temperature Ranges: Standard Fahrenheit and Celsius ranges have been established to encompass all normal temperature measurement requirements. A bimetal thermometer can be used at an operating temperature anywhere throughout its dial range. Provision should be made for extreme temperature conditions. No bimetal thermometer should be exposed continuously to process temperatures over 800°F (425°C).

Operating Conditions: The maximum ambient temperature of the case should be no more than 200°F (95°C) or liquid-filled series 150°F (65°C). Temperatures beyond this value may cause discoloration of the dial or result in increased pressure inside the casing which would ultimately lead to failure of the window. The lowest ambient temperature should not exceed –40°F (–40°C).

Thermowells: Thermowells must be used on any application where the stem of the bimetal thermometer may be exposed to pressure, corrosive fluids or high velocity. Additionally, the use of a thermowell permits instrument interchange or calibration check without disturbing or closing down the process.

Pointers: The pointers are balanced to close tolerances, and the paint finishes are controlled to assure long-term stability under adverse ultraviolet conditions.

Cases: There are three case styles. The CI series has no adjustment but is hermetically sealed. The hermetic seal prevents entry of moisture into the casing, minimizing the possibility of icing or fogging inside the case. The EL series provides the same features as the EI plus the added benefit of liquid filling which prolongs instrument life. Potential wear problems caused by excessive vibration are minimized through dampening, and the liquid medium improves readability. The instruments are leak-tested to ensure the integrity of the joints. Case and stem material is 304 stainless steel.

Coils: The bimetallic coils are carefully wound and inspected. Each is heat treated for optimum stability and overtemperature capability. Coils are silicone dampened for improved vibration resistance. A silicone free option is available.

Bearings: The bearings are made of Teflon or other low-friction material.

Shafts: The shafts are made of specially drawn stainless steel wire with a very smooth finish.

Dials: The dials are based on computer-calculated temperature deflection data and have the Maxivision® format to minimize parallax error.

Windows: The standard window on EI and CI series are heavy-duty glass. Plastic and shatterproof glass are optional. The standard window on EL series is polycarbonate. No other options are available.

The complete line of Ashcroft® industrial bimetal thermometers and accessories provides quality choices for your temperature applications. There is a long history of superior quality in engineering, manufacturing and customer service of these products. Each Ashcroft industrial bimetal thermometer is backed by a limited five year warranty.

Each instrument is manufactured to a standard accuracy of ±1% of span (ASME B40.3, Grade A) traceable to the National Institute of Standards and Technology (NIST). The bimetal coils are heat treated for stability and overtemperature capability. A single helix is used to reduce lag time. The bearings are made of a low-friction long-life material. The shafts are made of specially drawn stainless steel with a very smooth finish. All joints are welded, and the weld between the stem and the outlet is located at the bottom of the threads to eliminate the possibility of crevice corrosion.

Silicone dampening is included for improved vibration resistance. The Ashcroft Maxivision® dial minimizes parallax error by placing the pointer in the same plane as the graduations. The dial can be rotated 360 degrees and can be angled 180 degrees with the Everyangle™ connection.

Everyangle – Case Connection: The Ashcroft Everyangle™ industrial bimetal thermometer dial face with Maxivision dial can be rotated 360 degrees and angled 180 degrees. It is available in the EI and EL (5″ only in EL) series with either a threaded or compression type union connection.

This design provides maximum utility. Since the entire case can be rotated and angled, the instrument can be installed almost anywhere and adjusted so that the dial face can be easily read.

Distribuidor Autorizado
CALFER DE MÉXICO®
CONTROLES AUTOMÁTICOS INDUSTRIALES
50 ANIVERSARIO
www.calfer.com.mx 01 800 0125 742 /CalferMx
soporte.tecnico2@calfer.com.mx

TEMPERATURE INSTRUMENTS

GAS ACTUATED THERMOMETERS

C-600A-01 182-183
C-600A-02 182-183
C-600A-03 182-183
C-600A-04 182-183
C-600H-45 182-183
C-600B 184
Product Selection Information 185

Distribuidor Autorizado CALFER

CALFER DE MÉXICO®
CONTROLES AUTOMÁTICOS INDUSTRIALES

50 ANIVERSARIO

www.calfer.com.mx 01 800 0125 742 /CalferMx

soporte.tecnico2@calfer.com.mx

ASHCROFT®
Trust the shield.®

FEATURES

- Extreme resistance to shock and vibration
- Exclusive movementless design eliminates wear and increases product life
- No head or elevation error due to bulb placement
- Ideal for extreme process temperatures
- Maxivision® dial for precise readings (minimize parallax reading errors)
- Multiple case styles with lower and back connections, surface or flush mounted

SPECIFICATIONS

Models:	C-600A – 01 C-600A – 02 C-600A – 03 C-600A – 04 C-600H – 45
Accuracy:	±1% of span
Bulb Size:	3″ Long x ⅜″ OD 316 SS
Mounting & Connection:	Surface/Lower or Flush/Rear
Capillary Material:	316 SS
Line length:	5′ to 80′ in standard increments
Armor:	AISI 302 Spring armor (STD.), interlock, PVC coated, plain and no armor are (OPT.)
Window:	Glass, shatterproof glass and plastic are (OPT.)

TABLE 1 RANGES

Single Range		Dual Range	
AB	–320°F/200°F	CE	0°C/120°C and 20°F/240°F
AE	–100°F/100°F	CF	0°C/300°C and 50°F/550°F
AG	–40°F/180°F	DR	10°C/150°C and 50°F/300°F
AK	20°F/240°F	DT	–40°C/80°C and –40°F/180°F
AL	50°F/300°F		
AN	50°F/550°F		
AR	50°F/750°F		
AT	400°F/1200°F		
AY	–200°C/100°C		
BL	–80°C/40°C		
BN	–40°C/80°C		
BS	0°C/120°C		
BT	10°C/150°C		
BU	0°C/300°C		
BW	0°C/400°C		
BJ	200°C/650°C		

C-600A-01 Duratemp®
4½″ dial size

C-600A-02 Duratemp®
4½″, 6″ and 8½″, dial sizes

C-600A-03 Duratemp®
4½″ and 6″ dial sizes

C-600A-04 Duratemp®
4½″ and 6″ dial sizes

C-600H-45 Duratemp®
4½″ dial size

ORDERING CODE Example:	C600A01C01	B01	A1	L01	AB	XNH
Case Style & Size						
C-600A-01-C01 - 4½″ Case size, SS bayonet ring, surface mount, lower connection	C600A01C01					
C-600A-01-C11 - 4½″ Case size, SS bayonet ring, flush mount, rear connection						
C-600A-02-C12 - 4½″ Case size, aluminum hinged ring, flush mount, rear connection						
C-600A-02-C27 - 6″ Case size, aluminum hinged ring, flush mount, rear connection						
C-600A-02-C35 - 8½″ Case size, aluminum hinged ring, flush mount, rear connection						
C-600A-03-C02 - 4½″ Case size, aluminum threaded ring, surface mount, lower connection						
C-600A-03-C15 - 6″ Case size, aluminum threaded ring, surface mount, lower connection						
C-600A-04-C03 - 4½ Case size, phenolic snap ring, surface mount, lower connection						
C-600A-04-C08 - 4½″ Case size, phenolic snap ring, surface mount, rear connection						
C-600A-04-C38 - 4½″ Case size, phenolic snap ring, flush mount, rear connection						
C-600A-04-C16 - 6″ Case size, phenolic snap ring, surface mount, lower connection						
C-600A-04-C42 - 6″ Case size, phenolic snap ring, flush mount, rear connection						
C-600H-45-C60 - 4½″ Case size, phenolic hermetically sealed, surface mount, lower connection						
Bulb Style						
B01 - 12″ Bendable extention with ½ NPT union connection		B01				
B03 - Plain bulb with rigid extention, no union						
B08 - Plain bulb with rigid extention, ½ NPT union on armor						
B17 - 18″ Bendable extention with ½ NPT union connection						
B18 - 24″ Bendable extention with ½ NPT union connection						
Armor Style						
A1 - SS spring			A1			
Line Length (capillary length is measured from bottom of case to top of bulb extention)						
L01 - 5′				L01		
L03 - 10′						
L07 - 20′						
L09 - 30′						
L13 - 50′						
L19 - 80′						
Ranges (see table 1 on page 182 for range codes)						
AB - –320/200°F					AB	
Options - (if choosing an option(s) must include an "X")						X _ _
CS - Dual scale						
DM - Dial marking						
ED - High and low electric contacts (only available on C-600A-02, C-600A-03, & C-600A-04 models)						
EE - Double high electric contacts (only available on C-600A-02, C-600A-03, & C-600A-04 models)						
EF - Double low electric contacts (only available on C-600A-02, C-600A-03, & C-600A-04 models)						
EG - Electric contacts off at low or high and on in-between (only available on C-600A-02, C-600A-03, & C-600A-04 models)						
EO - Externally adjustable red set hand						
EP - Eternallay adjustable maximum pointer						
EQ - Externally adjustable minimum pointer						
NG - Nonglare glass						
NN - Paper tag						
NH - SS tag						NH
PD - Plastic window						
SG - Shatterproof glass						
SH - Stationary red set hand						
TK - Tank car thermometer						
63 - SS polished ring (C-600A-02 only)						

Distribuidor Autorizado CALFER
CALFER DE MÉXICO®
CONTROLES AUTOMÁTICOS INDUSTRIALES
50 ANIVERSARIO
www.calfer.com.mx 01 800 0125 742 /CalferMx
soporte.tecnico2@calfer.com.mx

Duratemp® Direct Mounted Thermometer

ASHCROFT®
Trust the shield.®

FEATURES

- Extreme resistance to shock and vibration
- Exclusive movementless design, eliminates wear and increases product life
- Ideal for extreme process temperatures
- Maxivision® dial for precise readings (minimize parallax reading errors)
- All SS case, stem and every angle harness

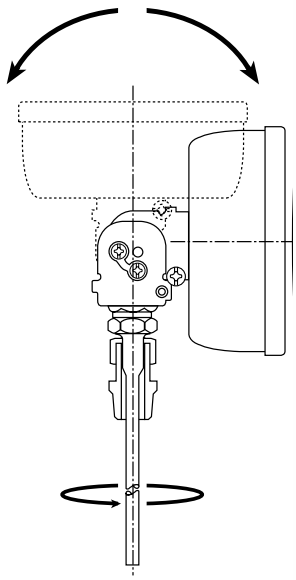

C-600B Duratemp®
4½″ dial size

SPECIFICATIONS

Model:	600B
Accuracy:	±1% of span
Connection:	½ NPT Union
Mounting & Connection:	Direct mount, ½ NPT union connection
Window:	Glass, shatterproof glass and plastic are (OPT.)
Case Material:	SS
Stem Material:	316 SS

ORDERING CODE

Example:	C600B	01	AB	XSG
Direct Mount				
C-600B - 4½″ Case size, SS bayonet ring, every angle connection	C600B			
Stem Length				
01 - 6″ Stem length “S” dimension		01		
02 - 9″ Stem length “S” dimension				
03 - 12″ Stem length “S” dimension				
04 - 15″ Stem length “S” dimension				
05 - 18″ Stem length “S” dimension				
06 - 24″ Stem length “S” dimension				
07 - 30″ Stem length “S” dimension				
08 - 36″ Stem length “S” dimension				
Ranges (see table 1 on page 182)				
AB - –320/200°F			AB	
Options (if choosing an option(s) must include an “X”)				X _ _
DM - Dial marking				
EO - Externally adjustable red set hand				
EP - Externally adjustable maximum pointer				
EQ - Externally adjustable minimum pointer				
NG - Nonglare glass				
NN - Paper tag				
NH - SS tag				
PD - Plastic window				
SG - Shatterproof glass				SG
SH - Stationary red set hand				

Distribuidor Autorizado CALFER
CALFER DE MÉXICO®
CONTROLES AUTOMÁTICOS INDUSTRIALES
50 ANIVERSARIO
www.calfer.com.mx 01 800 0125 742 /CalferMx
soporte.tecnico2@calfer.com.mx

Product Selection Information
Duratemp® Remote-Mount Thermometers

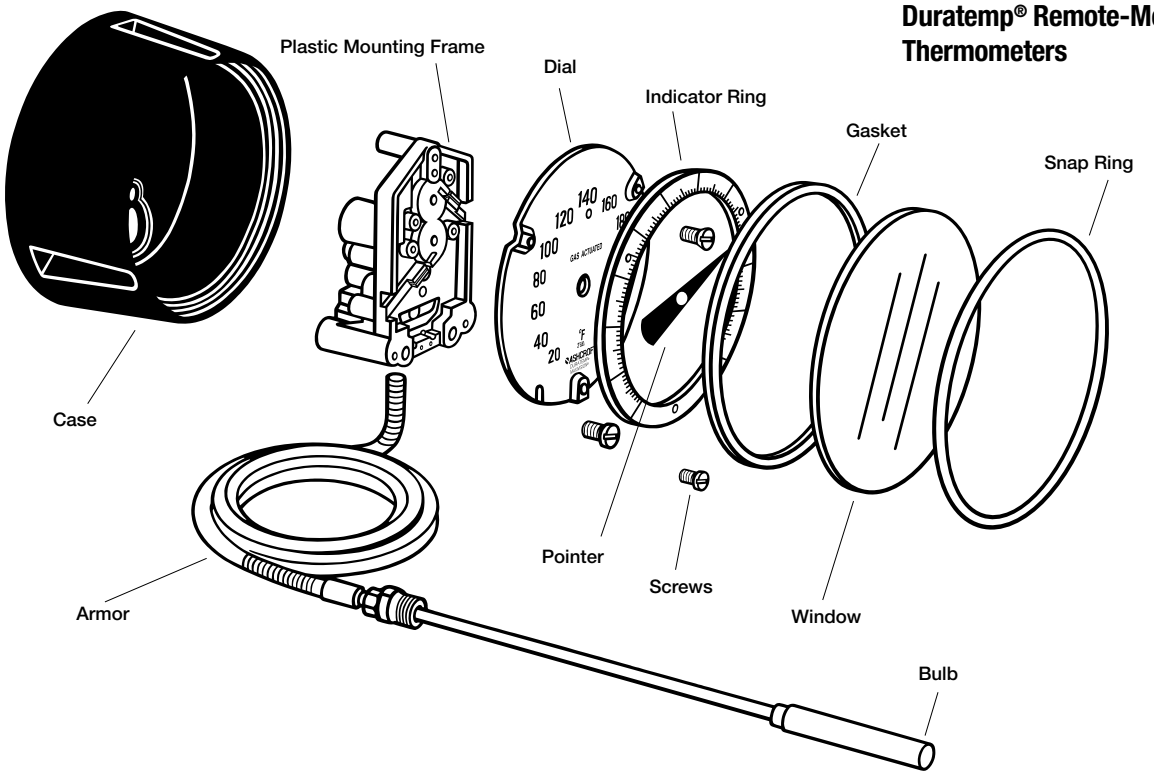

The Duratemp thermometer utilizes a combination of inert gas and activated carbon called a molecular sieve. This combination produces much lower internal pressures than conventional thermometers for the same temperature span. These lower pressures are transmitted to a compact helical Bourdon tube. The Bourdon tube connects directly to the pointer shaft thus eliminating the traditional movement assembly.

The Duratemp thermometer is able to provide long life and sustained accuracy under the most adverse shock and vibration conditions.

Accuracy: ±1% of range span.

Bulb Size: 3″ long by ⅜″ O.D. bulb.

Bulb Material: 316 SS

Ambient Error: Ambient error is a function of line length, ambient temperature and other system parameters. The error at mid-scale will be ±0.5% of range span for a ±25°F change in ambient temperature, for a typical thermometer. Consult factory for details.

Vibration and Shock Resistance: Extreme resistance similar to that required by MIL-T-19646.

Actuation: Gas/activated carbon. Pointer driven directly by lightweight helical Bourdon tube which is silicone damped.

Field Zero Adjustment: Adjustable pointer.

Over-range: Minimum 25% of span beyond top of range. If greater over-range is anticipated, consult Customer Service.

Head Error: None. No correction required for any mounting configuration.

Capillary Material: 300 SS

Line Length: 5-80 ft in standard increments.

Armor: AISI 302 Spring Armor as standard.

Ranges: Standard Fahrenheit ranges available from –320°F to 1200°F. Celsius and dual scale also available.

Cases: 5 basic cases with lower or back connections, surface or flush mounted in stainless steel, thermal thermoplastic or aluminum. All remote mount cases are field interchangeable, within the same range. Direct mount units available 4½″ stainless steel case only.

Direct Mount Stem Lengths: Eight standard increments of semi-rigid stainless steel from 6 inches to 36 inches.

Direct Mount Union: ½ NPT union connection at the top of the stem.

Operating Conditions: The maximum case temperature should not exceed 160°F (71°C). The line should be laid so that it will not be exposed to extreme temperatures such as nearby steam pipes, ovens or other heated surfaces.

Thermowells: Thermowells must be used on any application where the bulb of the thermometer may be exposed to pressure, corrosive fluids or high velocity. Additionally, the use of a thermowell permits instrument interchangeability or recalibration without shutting down the process.

Windows: The standard window for the Duratemp thermometer is glass. Shatterproof glass and plastic disc windows are optional.

MERCURY FREE

Gas Filled: NIOSH and OSHA compliance for mercury contamination hazards. Protects personnel and processes from accidental contamination.

No Head or Elevation Error: Gear and pinion movements are eliminated, resulting in increased instrument life and reduced replacement costs.

Silicone damped Bourdon tube eliminates damage from shock and vibration.

Distribuidor Autorizado CALFER
CALFER DE MÉXICO®
CONTROLES AUTOMÁTICOS INDUSTRIALES
50 ANIVERSARIO
www.calfer.com.mx 01 800 0125 742 /CalferMx
soporte.tecnico2@calfer.com.mx

TEMPERATURE INSTRUMENTS

THERMOWELLS

Threaded..... 188-192
Flanged 188-192
Van Stone..... 188-192
Socket Weld..... 188-192
Weld In 188-192
Sanitary 188-192
Dimension Drawings..... 193-195

ASHCROFT®
Trust the shield.®

FEATURES

- One-piece bar stock
- Full penetration welds standard on flanged thermowells
- All stamped with material and heat number
- Standard or customized shank dimensions
- Testing and certifications including wake frequency calculations

GOLD Service (RUSH)

SPECIFICATIONS

Thermowell Models: (See Table 1 for Process Connection details)	Threaded, Flanged, Socket Weld, Van Stone, Weld-In, Sanitary
Shank Style:	Tapered, straight, or stepped
Bore Size:	0.260″, 0.385″
Material:	304 SS, 316 SS, carbon steel, brass, and others
Instrument Conn.:	½ NPSM Standard, ½ NPT (OPT.)
Surface Finish:	16-32 Ra standard, except sanitary has 8-12 Ra standard with 4-12 Ra (OPT.), flange finish 125-250 RMS
Lagging:	2″ if U-dimension is <3″, 3″ if U-dimension is >3″

TABLE 1

	Process Conn.	Flange Facing	Rating/Class
Threaded	½, ¾, 1 NPT	N/A	N/A
Flanged	1″, 1½″, 2″	Raised, Flat, Ring Joint	150, 300, 600, 900, 1500, & 2500
Socket Weld	¾″, 1″	N/A	N/A
Van Stone	1″, 1½″	Lap Joint Backing	150, 300, 600
Weld-In	1½″	N/A	N/A
Sanitary	1″, 1½″, 2″ Tri-Clamp®	N/A	N/A

TABLE 2

OPTIONS	CODE
Thermowell attached to instrument (N/A on stem lengths greater than 6”, bimetals with union or flange style wells connections)	WX
Stamp tag number on thermowell	NF
SS tag wired to thermowell	NH
Hydrostatic test-external	W4
Hydrostatic test-internal	W9
Clean for oxygen service	6B
Wake frequency calculation	W5
Liquid dye penetrant	W2
CERTIFICATES	
Certificate of conformance (per order)	CD-1A
Physical and chemical material test report (MTR’s)	W6
Positive material identification (PMI), N/A on carbon steel	MQ
NACE certificate of compliance	C5

Flanged Thermowells

Van Stone Thermowells

Weld-In Thermowells

Socket Weld Thermowells

Sanitary Thermowells

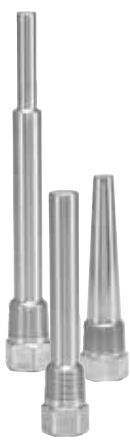

Threaded Thermowells

ASHCROFT®
Trust the shield.®

ORDERING CODE Example:	75	W	0250	L	H	T	260	S	2	XNH	L0350
P-Process Connection Size											
50 - ½ NPT (N/A with U of 0162)											
75 - ¾ NPT	75										
10 - 1 NPT											
Thermowell											
W - Thermowell		W									
U-Process Insertion Length											
0162 - 1⅝″ (Available only with "M" Process Connection Type & N/A with ½ NPT)											
0250 - 2½″			0250								
0450 - 4½″											
0750 - 7½″											
1050 - 10½″											
1350 - 13½″											
1650 - 16½″											
1950 - 19½″											
2250 - 22½″											
I-Instrument Connection											
Blank - ½ NPSM											
2 - ½ NPT											
T-Lagging											
Blank - No lagging											
L - Lagging				L							
Shank Type											
H - Tapered					H						
S - Straight											
R - Stepped											
Process Connection											
T - NPT Threaded						T					
M - Limited space threaded used with 1⅝″ U only											
D-Bore Diameter											
260 - 0.260″							260				
385 - 0.365″											
Material											
AA - Brass											
B - Carbon steel											
C - 304 SS											
S - 316 SS								S			
Cap and Chain											
Blank - No cap and chain											
1 - Brass											
2 - SS									2		
Options - (see table 2 on page 188 for additional options (If choosing an option(s) must include an "X")										X__	
NH - SS tag wired to thermowell										NH	
Special Lagging Length											
L - Lagging length × 100 (ex: 3.5″ × 100 = L0350)											L0350

Distribuidor Autorizado CALFER
CALFER DE MÉXICO®
CONTROLES AUTOMÁTICOS INDUSTRIALES
50 ANIVERSARIO
www.calfer.com.mx 01 800 0125 742 /CalferMx
soporte.tecnico2@calfer.com.mx

ASHCROFT®
Trust the shield.®

ORDERING CODE Example:	10	W	0400	L	H	F	260	S	2	XNF	F	150	L0350
Process Connection Size													
10 - 1″	10												
15 - 1½″													
20 - 2″													
Thermowell													
W - Thermowell		W											
U-Process Insertion Length													
0400 - 4″			0400										
0700 - 7″													
1000 - 10″													
1300 - 13″													
1600 - 16″													
2200 - 22″													
I-Instrument Connection													
Blank - ½ NPSM													
2 - ½ NPT													
Lagging													
Blank - No lagging													
L - Lagging				L									
Shank													
H - Tapered					H								
S - Straight													
R - Stepped													
Process Connection													
F - Flanged						F							
V - Van Stone													
D-Bore Diameter													
260 - 0.260″ (E = 0.625″) tapered only							260						
385 - 0.385″ (E = 0.766″) tapered only													
Material													
C - 304 SS													
S - 316 SS								S					
Cap and Chain													
Blank - No cap and chain													
1 - Brass													
2 - SS									2				
Options - (see table 2 on page 188 for additional options (If choosing an option(s) must include an “X”)										X__			
NF - Stamp tag number on thermowell										NF			
Flange Facing													
F - Flat											F		
R - Raised													
J - Ring joint													
L - Lap joint - (Van Stone only)													
Flange Rating													
150 - 150												150	
300 - 300													
600 - 600													
900 - 900													
1500 - 1500													
2500 - 2500													
Special Lagging Length													
L - Lagging length × 100 (ex: 3.5″ × 100 =L0350)													L0350

Distribuidor Autorizado CALFER
CALFER DE MÉXICO®
CONTROLES AUTOMÁTICOS INDUSTRIALES
50 ANIVERSARIO
www.calfer.com.mx 01 800 0125 742 /CalferMx
soporte.tecnico2@calfer.com.mx

ORDERING CODE Example:	75	W	0450	L	H	S	260	S	1	XNF	L0350
Process Connection Size											
75 - ¾″ (socket weld only)	75										
10 - 1″ (socket weld only)											
15 - 1½″ (weld In only)											
Thermowell											
W - Thermowell		W									
U-Process Insertion Length											
0250 - 2½″											
0450 - 4½″			0450								
0750 - 7½″											
1050 - 10½″											
1350 - 13½″											
1650 - 16½″											
2250 - 22½″											
I-Instrument Connection											
Blank - ½ NPSM											
2 - ½ NPT											
T-Lagging											
Blank - No lagging											
L - Lagging				L							
Shank Type											
H - Tapered					H						
S - Straight (N/A on weld in)											
R - Stepped (N/A on weld in)											
Process Connection											
S - Socket weld						S					
W - Weld in											
D-Bore Diameter											
260 - 0.260″ (E = 0.625″)							260				
385 - 0.365″ (E = 0.766″)											
Material											
C - 304 SS, (socket weld only)											
CL - 304 SL, (weld In only)											
S - 316 SS, (socket weld only)								S			
SL - 316 SL, (weld In only)											
Cap and Chain											
Blank - No cap and chain											
1 - Brass									1		
2 - SS											
Options - (see table 2 on page 188 for additional options (If choosing an option(s) must include an "X")										X__	
NF - Stamp tag number on thermowell										NF	
Special Lagging Length											
L - Lagging length × 100 (ex: 3.5″ × 100 = L0350)											L0350

ORDERING CODE Example:	15	W	0250			H	C	260	S	2	X6B	L0350
P-Process Connection Size												
10 - 1″												
15 - 1½″	15											
Thermowell												
W - Thermowell		W										
U-Process Insertion Length												
0250 - 2½″			0250									
0450 - 4½″												
0750 - 7½″												
1050 - 10½″												
1350 - 13½″												
1650 - 16½″												
2250 - 22½″												
I-Instrument Connection												
Blank - ½ NPSM												
2 - ½ NPT												
T-Lagging												
Blank - No lagging												
L - Lagging												
Shank Type												
H - Tapered						H						
S - Straight												
R - Stepped												
Process Connection												
C - Sanitary							C					
Bore Diameter												
260 - 0.260″ (E = 0.625″) taperd only								260				
385 - 0.385″ (E = 0.766″) taperd only												
Material												
C - 304 SS												
S - 316 SS									S			
Cap and Chain												
Blank - No cap and chain												
1 - Brass												
2 - SS										2		
Options - (see table 2 on page 188 for additional options (If choosing an option(s) must include an “X”)											X__	
6B - Clean for oxygen service											6B	
Special Lagging Length												
L - Lagging length × 100 (ex: 3.5″ × 100 = L0350)												L0350

ASHCROFT®
Trust the shield.®

Threaded Straight Thermowell

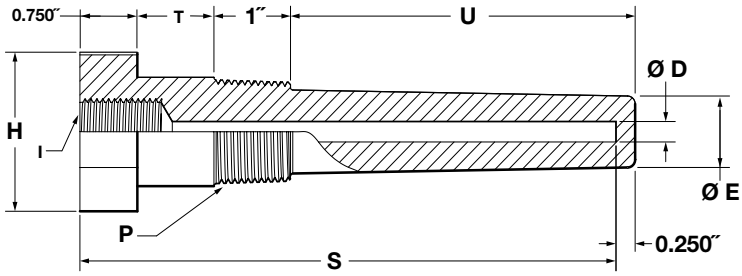

Threaded Straight - 0.260 & 0.385 Bore			
P	H	E 0.260 Bore	E 0.385 Bore
½″	1.125″	0.50″	0.625″
¾″	1.125″	0.50″	0.625″
1″	1.375″	0.50″	0.625″

Threaded Stepped Thermowell

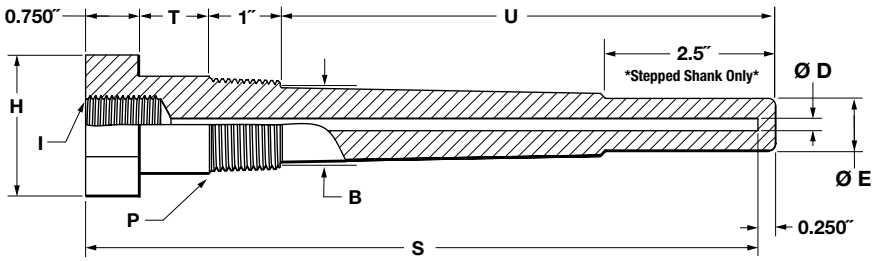

Threaded Stepped - 0.260 & 0.385 Bore			
P	H	B	E
½″	1.125″	0.625″	0.50″
¾″	1.125″	0.75″	0.50″
1″	1.375″	0.875″	0.50″

Threaded Tapered Thermowell

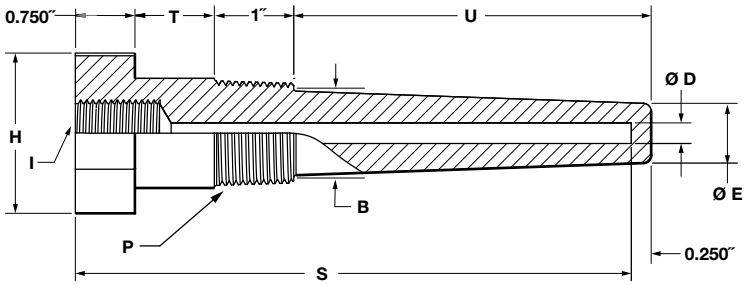

Threaded Tapered - 0.260 & 0.385 Bore				
P	H	B	E 0.260 Bore	E 0.385 Bore
½″	1.125″	0.625″	0.625″	0.766″
¾″	1.125″	0.875″	0.625″	0.766″
1″	1.375″	1.06″	0.625″	0.766″

Limited Space

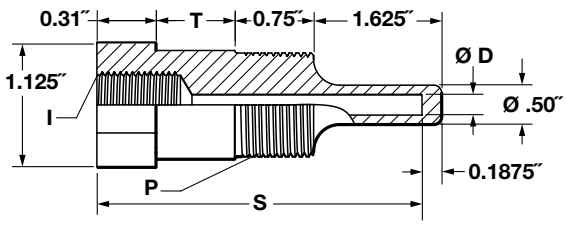

Thermowell Legend
I - Instrument connection
P - Process connection
T - Lag dimension when required
B - Root OD
E - Tip OD
D - Bore diameter
U - Insertion depth
S - Instrument stem length or bore depth
H - Hex size

ASHCROFT®
Trust the shield.®

Flanged Thermowell

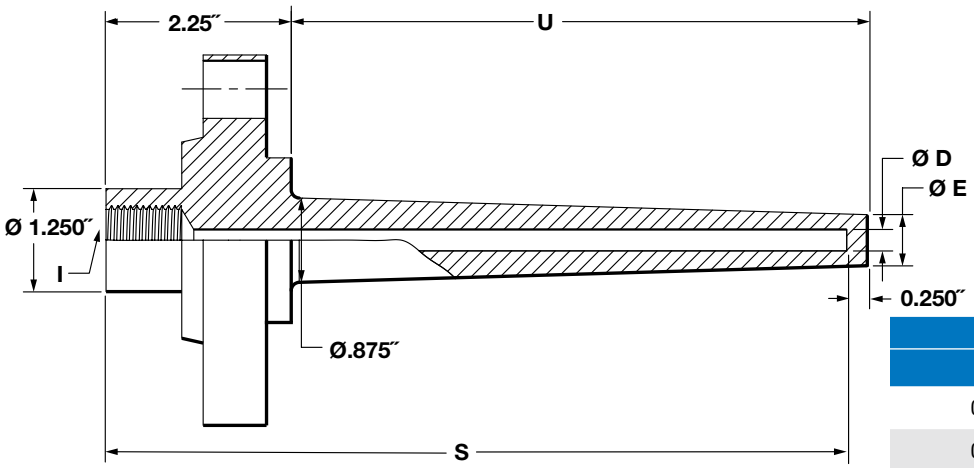

Flanged - Tapered	
D	E
0.260″	0.625″
0.385″	0.766″

Van Stone Thermowell

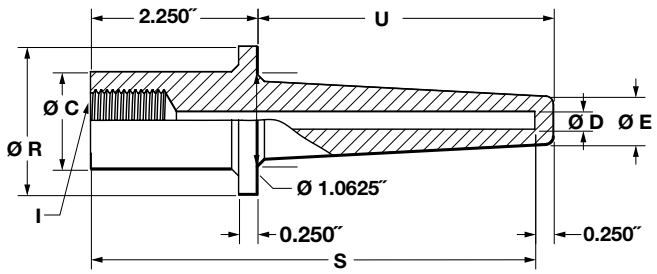

Van Stone - Tapered - 0.260 & 0.385 Bore		
P	C	R
1″	1.315″	2.00″
1½″	1.90″	2.875″

Socket Weld Thermowell

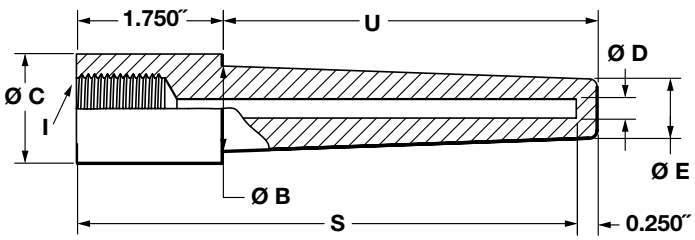

Socket Weld - Tapered 0.260 & 0.385 Bore					
P	C	B 0.260 Bore	B 0.385 Bore	E 0.260 Bore	E 0.385 Bore
¾″	1.05″	0.78″	0.87″	0.625″	0.766″
1″	1.315″	1.03″	1.03″	0.625″	0.766″

Weld In Thermowell

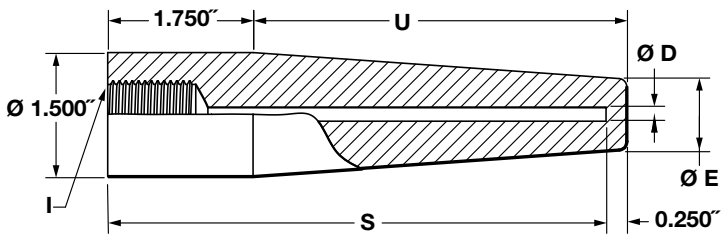

Thermowell Legend
I - Instrument connection
P - Process connection
T - Lag dimension when required
B - Root OD
E - Tip OD
D - Bore diameter
U - Insertion depth
S - Instrument stem length or bore depth

Distribuidor Autorizado CALFER
CALFER DE MÉXICO®
CONTROLES AUTOMÁTICOS INDUSTRIALES
50 ANIVERSARIO
www.calfer.com.mx 01 800 0125 742 /CalferMx
soporte.tecnico2@calfer.com.mx

ASHCROFT®
Trust the shield.®

Sanitary Straight Thermowell

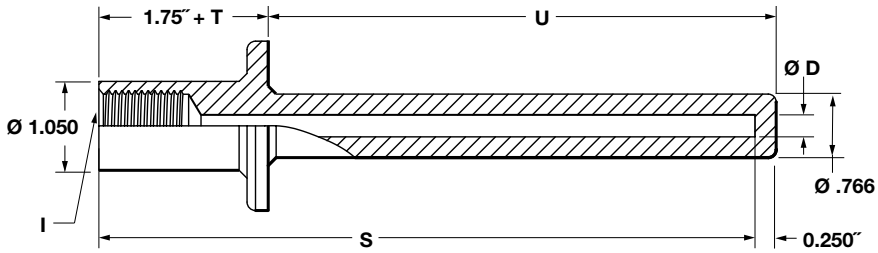

Sanitary Stepped Thermowell

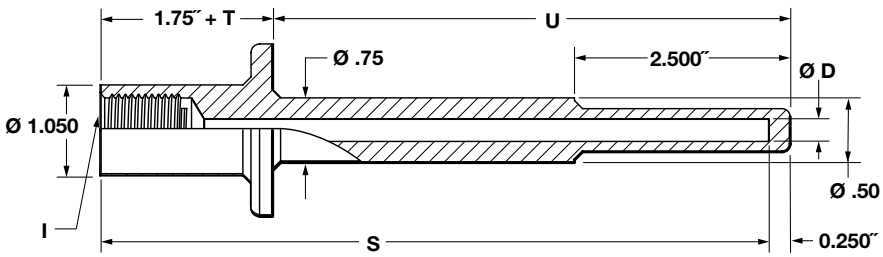

Sanitary Tapered Thermowell

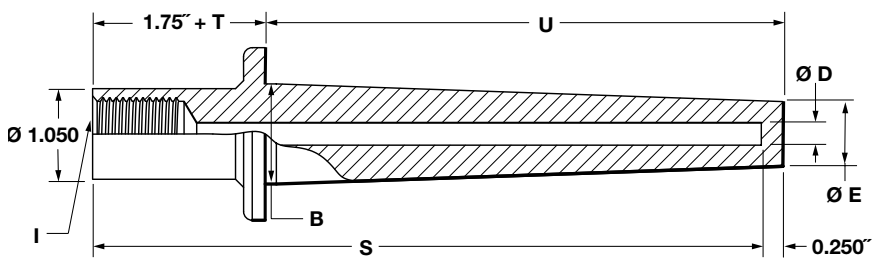

Sanitary Tapered		
B	E 0.260 Bore	E 0.385 Bore
0.875˝	0.625˝	0.768˝

Thermowell Legend
I - Instrument connection
P - Process connection
T - Lag dimension when required
B - Root OD
E - Tip OD
D - Bore diameter
U - Insertion depth
S - Instrument stem length or bore depth

TEMPERATURE INSTRUMENTS

TEMPERATURE SWITCHES

T- Series NEMA 4 198-199
T-Series NEMA 7/9 198-199
LT-Series NEMA 4 200-202
GT-Series NEMA 4 200-202
PT-Series Nema 7 200-202

T4/T7 Series NEMA 4X, 7/9 Temperature Switches

ASHCROFT®
Trust the shield.®

FEATURES

- Adjustable setpoints 0-100% of range
- Fixed or limited adjustable deadband
- Direct or remote reading thermal systems
- Internal setpoint locking screw (T4 only)

GOLD Service

T7 NEMA 7/9,
Remote Mount
Temperature Switch

T4 NEMA 4X
Direct Mount
Temperature Switch

RoHS COMPLIANT

SPECIFICATIONS

Set Repeatability (Accuracy):	±1% of span
Switch Type	SPDT or 2 SPDT acting as DPDT
Setpoint:	Single setpoint - factory set or field adjustable
Deadband:	Fixed or limited adjustable deadband
Enclosure Ratings:	T4-NEMA 4X, IP66 T7-NEMA 7/9, IP66
Enclosure Material	Watertight: epoxy coated aluminum Explosion: epoxy coated aluminum, 316 SS (OPT.)
Approvals:	Watertight: UL, CSA, CE Explosion: T7 series - UL, CSA, ATEX, IECEx, CE

FACTORY SEALED — LISTED

CLASS I DIV 1 GROUPS B, C, & D
CLASS II DIV 1 GROUPS E, F, & G

Sira 02ATEX1391X — IECEx CSA 14.0077X

II 2GD
Ex d IIC T6 Gb
Ex tb IIIC T85°C Db
Ta = -20°C to 60°C

WETTED COMPONENTS: Explosion Proof

Direct Mount:	½ NPT 316 SS
Remote Mount:	Bulb capillary: 316 SS Spiral armor: 302 SS

TABLE 1 – STANDARD TEMPERATURE RANGE SELECTION - For dual switch elements multiply by 1.6

Nominal Range		Maximum Temperature	Approximate Deadband Switch Element in °F				
°F	°C	°F	20, 26, 27	21, 24, 31	50	22	32, 42
–40 to 60	–40 to 16	400	1.0-2.0	3.0-8.0	1.5-5.5	1.4-6.0	8.0-16.0
0 to 100	–20 to 40	400	1.5-3.0	5.0-12.0	2.2-8.5	1.5-7.5	9.0-20.0
75 to 205	20 to 95	400	1.5-3.5	8.0-16.0	2.5-12.0	2.0-9.0	10.0-24.0
150 to 260	65 to 125	400	1.5-3.0	5.0-12.0	2.2-8.5	2.0-9.0	10.0-24.0
235 to 375	110 to 190	500	1.5-3.5	5.0-12.0	2.5-8.5	2.0-9.0	10.0-24.0
350 to 525	175 to 275	700	2.0-4.5	8.0-16.0	3.2-12.0	2.5-10.0	15.0-34.0
500 to 750	260 to 400	900	4.0-8.0	16.0-30.0	7.2-24.0	5.0-23.0	30.0-50.0

TABLE 2 – TEMPERATURE SWITCH OPTIONS

Code	Description	T 4	T7	NOTES
XCH	Chained cover	•	•	
XFP	Fungus proof	•	•	
XBX	½ Male NPT bushing	•	•	Remote mount only - seals capillary to thermowell
XC8	CSA approved	•		Standard on 400 Series
XCN	ATEX & IECEx directive 94/9/EC		•	
XFS	Factory adjusted setpoint	•	•	
XJK	Left conduit connection	•		Standard on T7. N/A with DPDT element on T4
XJM	Metric electrical conduit connection M20 x 1.5	•	•	
XLE	6 foot leads on the micro switch	•	•	
XNN	Paper tag	•	•	
XJL	¾″ to ½″ reducing bushing	•	•	Conduit reducing bushing
XK3	Terminal blocks		•	Terminal blocks standard with 700 dual switches
XNH	Tagging SS	•	•	
XPK	Pilot lights	•		N/A on T7 Series
XPM	¾″ sealed conduit connection with 16″ lead wires	•	•	
XTM	2″ pipe mounting bracket	•	•	

Distribuidor Autorizado CALFER
CALFER DE MÉXICO®
CONTROLES AUTOMÁTICOS INDUSTRIALES
50 ANIVERSARIO
www.calfer.com.mx 01 800 0125 742 /CalferMx
soporte.tecnico2@calfer.com.mx

ORDERING CODE Example:	T4	20	T05	027	XNH	75/205F
Enclosure						
T4 - Watertight enclosure meets NEMA 3, 4, 4X, 13 and IP66 requirements	T4					
T7 - Explosion-proof enclosure NEMA 3, 4, 7 & 9, IP66						
Switch Elements, UL/CSA Listed						
20 - Narrow deadband ac, 15A, 125/250 Vac		20				
21 - Ammonia service, 5A, 125/250 Vac						
22 - Hermetically sealed, narrow deadband, 5A, 125/250 Vac						
23 - Heavy duty ac, 22A, 125/250 Vac						
24 - General purpose, 15A, 125/250/480 Vac						
25 - Heavy duty dc, 10A, 125 Vac or dc, ⅛ HP, 125 Vac or dc						
26 - Sealed environment proof, 15A, 125/250 Vac						
27 - High temerature 300°F, 15A, 125/250 Vac						
28 - Manual reset trip on increasing, 15A, 125/250 Vac						
29 - Manual reset trip on decreasing, 15A, 125/250 Vac						
31 - Low level (gold) contacts, 15A, 125 Vac						
32 - Hermetically sealed switch, general purpose, 11A, 125/250 Vac 5A, 30 Vdc						
42 - Hermetically sealed switch, gold contacts, 1A, 125 Vac						
50 - Variable dead band, 15A, 125/250 Vac						
UL/CSA Listed Dual (2 SPDT)						
61 - Dual narrow deadband, 15A, 125/250 Vac						
62 - Dual sealed environment proof, 15A, 125/250 Vac						
63 - Dual high temp. 300°F, 15A, 125/250 Vac						
64 - Dual general purpose, 15A, 125/250/480 Vac, ½A, 125 Vdc, 1/4A, 250 Vdc						
65 - Dual ammonia service, 5A, 125/250 Vac						
67 - Dual hermetically sealed switch, narrow dead band, 5A, 125/250 Vac						
68 - Dual hermetically sealed switch, general purpose, 11A, 125/250 Vac, 5A, 30 Vdc						
70 - Dual low level gold contacts, 1A, 125/250 Vac						
71 - Dual hermetically sealed switch gold contacts, 1A, 125/250 Vac						
Thermal System Selection						
Direct Mount - System Material						
TS - 316 SS - Rigid						
Remote Mount						
T05 - 316 SS - 5´			T05			
T10 - 316 SS - 10´						
T15 - 316 SS - 15´						
T20 - 316 SS - 20´						
T25 - 316 SS - 25´						
Bulb Length Selection						
Direct Mount						
027 - 2¾″ -				027		
040 - 4″ 2½″						
060 - 6″ 4½″						
090 - 9″ 7½″						
120 - 12″ 10½″						
Remote Mount						
030 - 3″ 2½″						
Options (see table 2 on page 198) (If choosing an option(s) must include an "X")					X _ _	
NH - Tagging SS					NH	
Temperature Ranges						
-40/608°F						
0/100°F						
75/205°F						75/205F
150/260°F						
235/375°F						
350/525°F						
500/750°F						
-40/16°C						
-20/40°C						
20/95°C						
110/190°C						
175/275°C						
260/400°C						

ASHCROFT®
Trust the shield.®

FEATURES

- Fixed or adjustable dead bands
- Choice of temperature ranges (from -40°F to 750°F)
- Direct or remote reading thermal systems
- Wide choice of switch elements

RUSH GOLD Service

SPECIFICATIONS	
Set Repeatability (Accuracy):	±1% of full span
Switch Type:	SPDT or 2 SPDT with dual setpoints, or 2 SPDT acting as DPDT (L & G only)
Setpoint:	Single setpoint, fixed deadband Single setpoint, adjustable deadband Dual setpoint, fixed deadband
Deadband:	Fixed or adjustable deadband
Enclosure Ratings:	GT Series - NEMA 4X, IP66 LT Series - NEMA 4X, IP66 PT Series - NEMA 7/9, IP66
Enclosure Material:	GT Series - 316L SS LT Series - Epoxy coated aluminum PT Series - Epoxy coated aluminum
Approvals:	Watertight: L Series - UL, CSA, CE, RoHS G Series - UL, CSA, CE, RoHS
	Explosion Proof: P Series - UL, CSA, FACTORY SEALED CLASS I DIV 1 GROUPS B, C, & D CLASS II DIV 1 GROUPS E, F, & G

WETTED COMPONENTS: Explosion Proof	
Direct Mount:	½ NPT 316 SS
Remote Mount:	Bulb & capillary: 316 SS Spiral armor: 302 SS

LT-Series, NEMA 4
Remote Mount
Temperature Switch

LT-Series, NEMA 4
Direct Mount
Temperature Switch

GT-Series NEMA 4,
Remote Mount
Temperature Switch

GT-Series NEMA 4,
Direct Mount
Temperature Switch

PT-Series NEMA 7
Remote Mount
Temperature Switch

PT-Series NEMA 7
Direct Mount
Temperature Switch

RoHS COMPLIANT

TEMPERATURE RANGE SELECTION

Nominal Range		Max. Temp.	Approximate Deadband in °F								
			LTA-GTA	LTS-GTS				LTD-GTD			
			Switch Element								
°F	°C	°F	J,H	G	J,H	K,F	P	G,G	JJ,HH	KK,FF	PP
–40/60F	–40/16C	400	18-90	4.0-10	9.0-18	1.5-3	2-5	4.0-10	9.0-18	1.5-3	2-5
0/100F	–20/40C	400	30-90	5.0-15	10-30	1.5-5	3-7	5.0-15	10-30	1.5-4.5	3-7
75/205F	20/95C	400	34-120	6.0-18	10-34	3-5.5	3-8	6.0-18	10-34	3-5.5	3-8
150/260F	65/125C	400	25-100	3-13	9.0-25	1.5-4	3-7	3-13	9.0-25	1.5-4	3-7
235/375F	110/190C	500	35-130	6-19	10-35	2-5.5	3-8	6-19	10-35	2-5.5	3-8
350/525F	175/275C	700	40-165	5-27	15-40	3-7	3.5-11	5-27	15-40	3-7	3.5-11
500/750F	260/400C	900	50-200	20-36	36-60	5-10	6-21	20-36	36-60	5-10	6-21

Nominal Range		Max. Temp.	Approximate Deadband in °F								
			PTA	PTS				PTD			
			Switch Element								
°F	°C	°F	J,H	G	J,H	K,F	P	G,G	JJ,HH	KK,FF	PP
–40/60F	–40/16C	400	18-90	2-10	9-18	1-2	1-5	2-10	9-18	1-2	1-5
0/100F	–20/40C	400	30-90	2-15	10-30	1-3	1.5-7	2-15	10-30	1.5-3	1.5-7
75/205F	20/95C	400	34-120	2-17	10-34	1.5-3.5	1.5-8	2-17	10-34	1.5-3.5	1.5-8
150/260F	65/125C	400	25-100	2.5-12	9-25	1-2.5	1-7	2.5-12	9-25	1-2.5	1-7
235/375F	110/190C	500	35-130	2-18	10-35	1-4.5	1.5-8	2-18	10-35	1-3.5	1.5-8
350/525F	175/275C	700	40-165	3-25	15-40	2-3.5	2.5-11	3-25	15-40	2-4.5	2.5-11
500/750F	260/400C	900	50-200	20-36	36-60	5-10	6-21	20-36	36-60	5-10	6-21

G, L & P OPTIONS

Code	Description	G Series	L Series	P Series	NOTES
XCH	Chained cover	•	•	•	
XFP	Fungus proof	•	•	•	
XFS	Factory adjusted setpoint	•	•	•	Setpoint must be given as increasing or decreasing
XC8	CSA approved			•	Standard on L and G Series
XJL	¾ to ½ reducing bushing	•	•	•	Conduit reducing bushing
XK3	Terminal blocks	•	•	•	
XNH	Tagging SS	•	•	•	
XPK	Pilot lights		•		
XPM	¾″ sealed conduit connection with 16″ lead wires	•	•	•	
X2C	DPDT with single setpoint adjustment	•	•		Available with LTS and GTS models only
XBX	½ Male NPT bushing	•	•	•	Remote mount only - seals capillary to thermowell

Distribuidor Autorizado CALFER
CALFER DE MÉXICO®
CONTROLES AUTOMÁTICOS INDUSTRIALES
50 ANIVERSARIO
www.calfer.com.mx 01 800 0125 742 /CalferMx
soporte.tecnico2@calfer.com.mx

ASHCROFT®
Trust the shield.®

ORDERING CODE Example:	GTA	N4	H	05	A7	030	XNH	150/260F
Function/Enclosure								
GTS/LTS - Temperature control, single setpoint, fixed deadband								
GTA/LTA - Temperature control, single setpoint. adjustable deadband	GTA							
GTD/LTD - Temperature control, Two Independently adjustable setpoint, fixed deadband								
PTA - Temperature control, single setpoint, adjustable deadband single setpoint, adjustable deadband N7-NEMA 7&9, IP66, explosion proof Div. 1 & 2								
PTD - Temperature control, two independently, adjustable setpoint, fixed deadband N7-NEMA 7&9, IP66, explosion proof Div. 1 & 2								
PTS - Temperature control, single setpoint, fixed deadband N7-NEMA 7 & 9, IP66, explosion proof Div. 1 & 2								
Enclosure								
N4 - NEMA, 4X		N4						
N7 - NEMA 7, 9, IP66 (explosion proof Div. 1 & 2)								
Switch Elements For GTA/LTA/PTA Controls								
H - General purpose - 10A,125/250 Vac, 1/2A, 125 Vdc, 1/4A, 250 Vdc			H					
J - Hermetically sealed, general purpose - 11A, 125/250 Vac 5A, 30 Vdc								
Single/Dual Switch Elements For GTD/LTD & GTS/LTS Controls								
C/CC - Heavy duty ac - 22A, 125/250 Vac								
E/EE - Manual Reset, Actuates on decreasing pressure - 15A, 125/250 Vac, 6A, 130 Vdc (available on L series only)								
F/FF - Sealed environment proof - 15A, 125/250 Vac (estimated dc rating - 4A, 28 Vdc, not UL listed)								
G/GG - General purpose - 15A, 125/250/480 Vac, ½A, 125 Vdc, ¼A, 250 Vdc (not UL listed at 480 Vac)								
H/HH - General Purpose - 10A, 125/250 Vac 10A, Vdc - (P series only)								
J/JJ - Hermetically sealed switch, general purpose - 11A, 125/250 Vac 5A, 30 Vdc								
K/KK - Narrow Deadband - 15A, 125/250 Vac (estimated dc rating - 0.4A, 120 Vdc, not UL listed)								
L/LL - Hermetically Sealed, Gold Contacts - 1A, 125 Vac (available on L series only)								
M/MM - Low level gold contacts, 1A - 125 Vac								
P/PP - Hermetically sealed AC - 5A, 125/250 Vac (estimated dc rating - 2.5A, 28 Vdc, not UL listed)								
S/SS - Heavy Duty DC - 10A, 125 Vac or Vdc, ⅛ HP, 125 Vac or Vdc								
U/UU - Manual Reset, Actuates on Increasing Pressure - 15A, 125/250 Vac, 6A, 130 Vdc								
Y/YY - High Temperature 300°F Ambient - 15A, 125/250 Vac								
W/WW - Ammonia Service - 5A, 125/250 Vac, 6A, 30 Vdc								
Line Length (G & P Series Only)								
Direct Mount								
00 - Not applicable								
Remote Mount - Capillary with Armor								
05 - 5´				05				
10 - 10´								
15 - 15´								
20 - 20´								
25 - 25´								
Thermal System Selection								
Direct Mount								
No entry required for direct mount								
Remote Mount								
A7 - SS Armor (STD.)					A7			
Bulb Length Selection								
Direct Mount								
S Dim. U Dim.								
027 2¾″								
040 4″ 2½″								
060 6″ 4½″								
090 9″ 7½″								
120 12″ 10½″								
Remote Mount								
030 3″ 2½″						030		
Options (see options table on page 201 (If choosing an option(s) must include an "X")							X_ _	
NH - Tagging SS							NH	
Temperature Ranges (see temperature range table on page 201)								
150/260°F								150/260F

Distribuidor Autorizado CALFER
CALFER DE MÉXICO®
CONTROLES AUTOMÁTICOS INDUSTRIALES
50 ANIVERSARIO
www.calfer.com.mx 01 800 0125 742 /CalferMx
soporte.tecnico2@calfer.com.mx

TEMPERATURE INSTRUMENTS

RTDS & THERMOCOUPLES

RTDS

AR10 , AR20 204

Thermocouples

AT10, AT20, AT30 205

ASHCROFT®
Trust the shield.®

FEATURES

- Designed for ISA-ds 49 style thermowells (AR20 only)
- Manufactured to IEC 60751
- Designed for DIN 43772 thermowells (AR10 only)

SPECIFICATIONS

Insert Stem Diameter:	AR10 RTD: AR20 RTD:	3 mm, 4.5 mm, 6 mm, 8 mm 3 mm, 4.5 mm, 6 mm, 8 mm, ⅛″, 3⁄16″, ¼″
Stem Length:	Minimum: 0.05m/2″ Maximum: 100m/3937″	
Sensor Type & Measuring range:	Pt 100 Pt 1000	–200°C to 600°C –40°C to 600°C
Wiring Configuration:	2 wire, 3 wire, 4 wire	
Accuracy Class:	Class A: Class B: ½ Class B: ⅓ Class B:	±(0.15 + 0.0020 * |t|) ±(0.30 + 0.0050 * |t|) ±(0.15 + 0.0025 * |t|) ±(0.10 + 0.0017 * |t|) *Absolute temperature in °C

SEE ONLINE DATASHEET FOR ORDERING CODE

AR10
Resistance Temperature Detector

AR20
Resistance Temperature Detector

Distribuidor Autorizado CALFER
CALFER DE MÉXICO®
CONTROLES AUTOMÁTICOS INDUSTRIALES
50 ANIVERSARIO
www.calfer.com.mx 01 800 0125 742 /CalferMx
soporte.tecnico2@calfer.com.mx

ASHCROFT®
Trust the shield.®

FEATURES

- Designed for DIN 43772 thermowells
- Manufactured to 60584-2, or ANSI MC 96.1
- Designed to be used with ISA-ds 49 style thermowells
- Weldable sensor head (AT30 only)
- Integrated expansion loop allows for expansion and contraction within temperature changes (AT30 only)

SPECIFICATIONS

Insert Stem Diameter:	AT10: AT20:	3 mm, 4.5 mm, 6 mm, 8 mm 3 mm, 4.5 mm, 6 mm, 8 mm, 1/8″, 3/16″, 1/4″
Stem Length:	Minimum: 0.05m/2″ Maximum: 100m/3937″	
Sensor Type & Measuring Range:	Type J Type E Type K Type N	–40°C to 750°C –200°C to 800°C –200°C to 1100°C –200°C to 1100°C
Wiring Configuration:	2 wire	
Accuracy Class:	IEC 60584-2 Class 1, Class 2, Class 3 ANSI MC96.1 (STD.), special	

SEE ONLINE DATASHEET FOR ORDERING CODE

SPECIFICATIONS

Insert Stem Diameter:	AT30: 6 mm, 8 mm, 3/8″	
Stem Length:	Minimum: 0.05m/2″ Maximum: 100m/3937″	
Sensor Type & Measuring Range:	Type J Type K	–40°C to 750°C –200°C to 1100°C
Wiring Configuration:	2 wire	
Accuracy Class:	IEC 60584-2: Class 1, Class 2, Class 3 ANSI MC 96.1: Standard, special	

SEE ONLINE DATASHEET FOR ORDERING CODE

AT10
Thermocouple

AT20
Thermocouple

AT30
Skin

TEST INSTRUMENTS

ATE-2 208
AM2-1, AM2-2 209-211
ST-2A Digital Tester 212
AQS-1 213
AQS-2 214
PT-1 Pressure Tester 215-217
AVC-1000 & AVC-3000 218
DPPV-Kit 218
APOV-Kit 218
XHOV-Kit 218
1305D, 1305DH 219-220
1327CM, 1327D 219-220

ATE-2 Hand Held Calibrator

ASHCROFT®
Trust the shield.®

FEATURES

- Monitor up to 3 parameters at once: pressure, temperature, voltage or current
- Built in data logging up to 16,000 records
- SD memory card slot for additional data log storage
- USB Communications interface
- IP65/NEMA 4X for all weather functionality

SPECIFICATIONS

Sensor Inputs:	Two Interchangeable pressure and temperature module bays, banana jack inputs for DC voltage or current monitoring
Pressure Modules:	Pressure ranges from 0.25 inH_2O up to 10,000 psi Accuracy from ±0.025% to ±0.1% of span Hot Swap capable.
LCD Display:	2.5˝ (W) x 1.5˝ (H) displays 3 simultaneous measurements, bar graph, back light, flip screen capability
Electrical Connection:	4mm banana jacks – 1 set of test leads included
Loop Power Supply:	24Vdc-35mA maximum (non I.S. only)
Available Engineering Units:	psi, inH_2O, inHg, ft SW, bar, mbar, kPa, MPa, mmHg, cmH_2O, mmH_2O, kg/cm^2, user programmable
Operating Temp. Range:	-4°F to 120°F (-20°C to 49°C)
Storage Temperature:	-4°F to 158°F (-20°C to 70°C)
Update Rate:	100ms – 1 module installed 200ms – 2 modules installed 300ms – 2 modules installed and external input
Resolution:	±0.001% span; 99,999 counts
Electrical Measurements:	0-20mA or 0-30Vdc
Programmable Filtering (Damping):	Levels 1 through 16
Temperature Effect Electrical Measurement:	±0.001% of span per °F over compensated range from reference temperature of 70°F (±3°F)
Serial Interface:	USB (Micro-B connector type)
Field Calibration:	Base Unit and pressure modules may be field-calibrated via keypad commands
Data Logging:	• Internal storage for up to 64 data logs and up to 16,000 records; transferrable to SD card • Manual/automatic data logging capability • Programmable data intervals (0.1 sec. to 24 hrs.)
Power Requirements:	(4) AA Batteries or via USB power supply or USB universal AC adapter 100-240Vac, 50/60 Hz included
Battery Life:	Up to 40 hours battery with 2 modules installed
Certification:	NIST traceable certification document provided for base unit and Quick-Select™ sensor modules
Agency Approvals:	CE, FCC (CFR47), UL 61010-1

ATE-2
Hand Held Calibrator

OPTIONAL APPROVALS

Hazardous Location Version (Battery Powered Only):
Note: Loop power supply is not included with Intrinsically Safe Units

FM Intrinsic Safety
CL 1, Div 1, Gr A, B, C, D
CSA Intrinsic Safety
CL 1, Div 1, Gr A, B, C, D
ATEX Ex ia ii c T4 Ga –20°C<Ta<50°C

ORDERING CODE

P/N:	Description	Version
ATE 2ST	Ashcroft base unit	(ST) Standard
ATE 2IS	Ashcroft base unit	(IS) Intrinsically safe

Distribuidor Autorizado CALFER
CALFER DE MÉXICO®
CONTROLES AUTOMÁTICOS INDUSTRIALES
50 ANIVERSARIO
www.calfer.com.mx 01 800 0125 742 /CalferMx
soporte.tecnico2@calfer.com.mx

ASHCROFT®
Trust the shield.®

FEATURES

- Low pressure modules ranges from 0.25 inH_2O (IWC) to 200 inH_2O (IWC), accuracy ±0.1% to ±0.07% of span, variable capacitance sensor, for use with clean dry gas media
- Meduim/high pressure modules 5 to 10,000 psi, accuracy ±0.1% to ±0.025% of span, 316 SS isolated sensor, for use with media compatible with 316 SS
- Gauge, absolute, differential and compound ranges available
- Temperature compensated 20°F to 120°F

AM2-1
Pressure Module

AM2-2
Pressure Module

PRODUCT SPECIFICATIONS:

AM2-1 Low Pressure Modules:

Pressure Types:	Differential and compound
Available Ranges:	Refer to range table
Available Accuracies:	±0.06% of span (0/1-0/200 inH_2O) ±0.07% of span (0/0.25-0/0.5 inH_2O) ±0.1% of span
Compensated Temperature Range:	20°F to 120°F (–7°C to 49°C)
Temperature Effect:	±0.004% of span per °F over compensated range from reference temperature range of 70°F (±3 degrees)
Repeatability:	±0.01% of span (range 0/1 inH_2O or higher) ±0.02% of span (range below 1.0 inH_2O)
Sensitivity:	±0.002% of span (typical)
Under / Overpressure Capability:	–15 to 50 psi
Maximum Static (line) Pressure:	100 psi
Process Connection:	⅛ NPT Female (STD.)
Media Compatibility:	Clean, dry, non-conductive, non-corrosive gas

PRODUCT SPECIFICATIONS:

AM2-2 Medium High Pressure Modules:

Pressure Types:	Gauge, absolute, compound and vacuum
Available Accuracies:	±0.025%, ±0.05% or ±0.1% of span (10,000 psi only offered in psig and ±0.1% accuracy)
Compensated Temperature Range:	20°F to 120°F (–7°C to 49°C)
Temperature Effect:	Standard: ±0.004% of span per °F over compensated range from reference temperature range of 70°F (±3 degrees) Optional: Enhanced Accuracy Option. No additional error due to ambient temperature from 20°F to 120°F
Sensitivity:	±0.002% of span (typical), ±0.001 of span (max)
Repeatability:	±0.01% of span
Overpressure Compatibility:	200% for ranges to ≤ 1,000 psi 150% for ranges > 1,000 psi
Media Compatibility:	Any medium compatible with 316 SS isolation; 10,000 psi range only available with 17-4 PH / 316 SS
Optional:	Cleaned for oxygen service

Distribuidor Autorizado CALFER
CALFER DE MÉXICO®
CONTROLES AUTOMÁTICOS INDUSTRIALES
50 ANIVERSARIO
www.calfer.com.mx 01 800 0125 742 /CalferMx
soporte.tecnico2@calfer.com.mx

AM2-1 Low Pressure Module

ORDERING CODE Example:	AM2	1	C	A	D	INH2O/	100	A
Model								
AM2 - Low pressure module	AM2							
Sensor Type								
1 - Capacitive sensor		1						
Accuracy								
B - ±0.1% Accuracy (STD.)								
C - ±0.06% Accuracy (STD.) (“C” accuracy is ±0.06% for ranges 1.0 inH_2O and higher)			C					
C - ±0.07% Accuracy (STD.) (“C” accuracy is ±0.07% for ranges below 0.5 inH_2O and bolded values in range table)								
Media Compatability								
A - Non-Isolated Sensor				A				
Pressure Type								
C - Compound								
D - Differential					D			
Pressure Units								
INH2O						INH2O/		
MMHG								
KPA								
MBAR								
CMH2O								
MMH2O								
Ranges (see range table below)								
100							100	
Inlet Fitting								
A - ⅛ NPT INTERNAL								A

DIFFERENTIAL PRESSURE RANGES					
inH2O	mmHg	kPa	mbar	cmH2O	mmH2O
0.25	**0.5**	**0.2**	**0.6**	**0.6**	**6**
0.5	1	0.5	1	1.5	15
1	2	1	2.5	3	30
2	3	2.5	4	5	50
3	5	4	6	6	60
5	10	6	10	15	150
10	20	10	25	30	300
15	30	25	40	60	600
25	50	40	60	150	1500
50	100		100	200	2000
100	200		250	500	5000
150	300		400		
200					

COMPOUND PRESSURE RANGES (All prefixed by ± sign)					
0.125	**0.2**	**0.1**	**0.25**	**0.3**	**3**
0.25	**0.5**	**0.25**	**0.6**	**0.6**	**6**
0.5	**1**	0.4	**1**	**1.5**	**15**
1	**2**	0.6	**2.5**	**3**	**30**
1.5	3	1	4	5	50
2.5	5	1.6	6	6	60
5	10	2.5	10	15	150
7.5	15	6	16	20	200
12.5	20	10	25	30	300
25	50	25	60	60	600
50	75		100	150	1500
75	100		160	200	2000
100	150		250	300	3000
	200				

Bold type indicates “C” accuracy is ±0.07% of full span

ASHCROFT®
Trust the shield.®

ORDERING CODE Example:	AM2	2	H	I	G	PSI/	1500	A
Model								
AM2 - Medium/High pressure module	AM2							
Sensor Type								
2 - Piezo-resistive sensor		2						
Accuracy								
B - ±0.1% accuracy (STD.)								
C - ±0.05% accuracy (STD.)								
D - ±0.025% accuracy (STD.)								
F - ±0.1% Enhanced temperature compensation 20°F to 120°F								
G - ±0.05% Enhanced temperature compensation 20°F to 120°F								
H - ±0.025% Enhanced temperature compensation 20°F to 120°F			H					
Media Compatability								
I - Isolated sensor				I				
O - Isolated oxygen service								
Pressure Type								
G - Gauge					G			
A - Absolute								
V - Vacuum								
C - Compound								
Pressure Units								
PSI						PSI/		
INH2O								
INHG								
KPA								
MBAR								
CMH2O								
MMHG								
BAR								
MPA								
MMH2O								
KGCM2								
Ranges (see range table below)								
1500							1500	
Inlet Fitting								
A - ⅛ NPT Internal								A
B - ⅛ NPT Internal with flush port								
C - G ⅛ British std thread								
D - G ⅛ British std with flush port								
E - 0.3525-24 UNJF-3B Internal Thread MS33649-02								

GAUGE / ABSOLUTE PRESSURE RANGES (*Gauge pressure only) (no absolute)

psi	inH_2O	inHg	kPa	mbar	cmH_2O	mmHG	$bar/kgcm^2$	MPa	mmH_2O
5	*100	10	*25	*250	*250	250	1	1	*3000
10	150	20	40	*300	*300	500	1.6	1.6	5000
15	250	30	60	400	400	750	2.5	2.5	10000
20	300	50	100	500	500	1000	4	4	
30	400	100	160	600	600	1500	6	6	
50	500	200	250	1000	1000	3000	10	10	
60	800	300	400	1600	1600	5000	16	16	
100	1000	500	600	2000	2000		25	25	
150			1000	2500	2500		40	40	
200				4000	4000		60	50	
250				5000	5000		100		
300				6000	6000		160		
500				10000	10000		250		
600							400		
1000							500		
1500									
2000									
2500									
3000									
5000									
6000									
7500									
*10000									
Vacuum Ranges									
10		20	60	600	600	500	0.6		5000
15		30	100	1000	1000	750	1		
Compound Pressure Ranges									
5	100	10	25	300	300	300	0.25		3000
10	250	20	40	600	600	500	0.4		6000
V15	V400	V30	60	V1000	V1000	V750	0.6		V10000
V30		V60	V100	V2000	V2000	V1500	V1		
V60		V100	V200	V4000	V4000	V3000	V2		
			V400				V4		

*Gauge pressure only and 0.1% accuracy only

Distribuidor Autorizado CALFER
CALFER DE MÉXICO®
CONTROLES AUTOMÁTICOS INDUSTRIALES
50 ANIVERSARIO
www.calfer.com.mx 01 800 0125 742 /CalferMx
soporte.tecnico2@calfer.com.mx

ASHCROFT®
Trust the shield.®

FEATURES

- Benchtop digital pressure indicator
- Works with Quick Select™ interchangeable pressure modules with ranges from 0.25 IWC (inH_2O) up to 10,000 psi (AQS-1 and AQS-2)
- Pressure measurement accuracies of ±0.1% to ±0.025% range dependent
- RS232 communications interface

SPECIFICATIONS

Sensor Inputs:	Two interchangeable pressure and temperature module bays, banana jack connections for 0-30 Vdc or 0-50 mA
Pressure Modules:	Pressure ranges from 0.25 IWC (inH_2O) up to 10,000 psi. Accuracy from ±0.025% to ±0.1% of span
Enclosure:	Molded high impact ABS case
LCD Display:	Alphanumeric LCD, 0.37-inch height, 2 lines, 16 characters per line
Electrical Connection:	4mm banana jacks
Operating Temperature Range:	32°F to 120°F (0°C to 49°C)
Storage Temperature:	–4°F to 158°F (–20°C to 70°C)
Update Rate:	130 ms with one module installed
Resolution:	±0.002% span; 60,000 counts
Electrical Measurements:	0-50 mA or 0-30 Vdc
Input Volts Accuracy:	0/10 Vdc ±0.025% fs; 10/30 Vdc ±0.10% fs
Input mA Accuracy:	0-20mA ±0.03% fs
Programmable Damping:	Average from 1-16 consecutive readings
Temperature Effect Electrical Measurement:	±0.004% of span per °F over compensated range from reference temperature of 70°F (±3°F)
RS232 Serial Interface:	9 pin D type, 300, 1200, 2400, 9600 baud

ST-2A
Digital Indicator

Field Calibration:	Base Unit and pressure modules may be field-calibrated via keypad commands
Data Logging:	Optional up to 714 measurements
Power Requirements:	9 Vdc (Includes standard ac adapter for 110 Vac/60Hz)
Battery Life with optional battery pack:	20 hours with optional backlight off, 2 hours with backlight on
Certification:	NIST traceable certification document provided for base unit and Quick-Select™ sensor modules

ORDERING CODE

ORDERING CODE Example:	ST2A1	B	D1	L
Model				
ST2A1 - Indicator base with 110 Vac/60Hz A/C	ST2A1			
ST2A2 - Indicator base with 220 Vac/50Hz A/C adapter				
ST2A3 - Indicator base with 100 Vac/60Hz A/C adapter				
Base Unit – Optional Features				
Code Description				
B - Back Lit LCD		B		
D1 - Datalogging (includes Hi-Lo Alarms)			D1	
N - NiCad batteries (rechargeable)				
A - Alkaline Batteries (non-rechargeable)				
H - Handle				
L - Loop power supply				L
P - Panel mounting brackets				

Distribuidor Autorizado CALFER
CALFER DE MÉXICO®
CONTROLES AUTOMÁTICOS INDUSTRIALES
50 ANIVERSARIO
www.calfer.com.mx 01 800 0125 742 /CalferMx
soporte.tecnico2@calfer.com.mx

ORDERING CODE Example:	AQS1	C	A	C	INWC	5.0	A
Model							
AQS1 - Capacitive sensor	AQS1						
Accuracy							
B - ±0.1% Accuracy (STD.)							
C - ±0.06% Accuracy (STD.) (“C” accuracy is ±0.06% for ranges 1.0 inH_2O and higher)		C					
C - ±0.07% Accuracy (STD.) (“C” accuracy is ±0.07% for ranges below 0.5 inH_2O and bolded values in range table)							
Media Compatibility							
A - Non-isolated sensor, clean dry gas only			A				
Pressure Type							
C - Compound				C			
D - Differential							
Pressure Units							
INWC - InH_2O					INWC		
Pressure Range Differential							
0.25 - IWC (inH_2O)							
0.5 - IWC (inH_2O)							
1.0 - IWC (inH_2O)							
2.0 - IWC (inH_2O)							
3.0 - IWC (inH_2O)							
5.0 - IWC (inH_2O)						5.0	
10 - IWC (inH_2O)							
15 - IWC (inH_2O)							
25 - IWC (inH_2O)							
100 - IWC (inH_2O)							
150 - IWC (inH_2O)							
200 - IWC (inH_2O)							
Pressure Range Compound							
0.125 - IWC (inH_2O)							
0.25 - IWC (inH_2O)							
0.5 - IWC (inH_2O)							
1.0 - IWC (inH_2O)							
1.5 - IWC (inH_2O)							
2.5 - IWC (inH_2O)							
5.0 - IWC (inH_2O)							
7.5 - IWC (inH_2O)							
12.5 - IWC (inH_2O)							
25 - IWC (inH_2O)							
50 - IWC (inH_2O)							
75 - IWC (inH_2O)							
100 - IWC (inH_2O)							
Pressure Connection Size							
A - ⅛ NPT Female							A

ORDERING CODE Example:	AQS2	C	I	G	PSI	100	A
Model							
AQS2 - Piezoresistive sensor	AQS2						
Accuracy							
B - ±0.1%							
C - ±0.05%		C					
D - ±0.025%							
F - ±0.1%, Enhanced temperature compensation 20°F to 120°F							
G - ±0.05%, Enhanced temperature compensation 20°F to 120°F							
H - ±0.025%, Enhanced temperature compensation 20°F to 120°F							
Media Compatibility							
I - Isolated 316 SS wetted parts			I				
O - Isolated 316 SS wetted parts, cleaned for oxygen service							
Pressure Type							
G - Gauge				G			
A - Absolute							
V - Vacuum							
C - Compound							
Pressure Units							
PSI - Pounds per square inch					PSI		
Pressure Range Gauge or Absolute							
10 - 10 psi							
15 - 15 psi							
20 - 20 psi							
25 - 25 psi							
30 - 30 psi							
50 - 50 psi							
60 - 60 psi							
100 - 100 psi						100	
150 - 150 psi							
200 - 200 psi							
250 - 250 psi							
300 - 300 psi							
500 - 500 psi							
600 - 600 psi							
1000 - 1,000 psi							
1500 - 1,500 psi							
2000 - 2,000 psi							
2500 - 2,500 psi							
3000 - 3,000 psi							
5000 - 5,000 psi							
6000 - 6,000 psi							
7500 - 7,500 psi							
Pressure range gauge only							
5 - 5 psig							
10000 - 10,000 psig							
Pressure range vacuum							
10 - 10 psi							
15 - 15 psi							
Pressure range compound							
10 - 10 psi							
15 - 15 psi							
30 - 30 psi							
60 - 60 psi							
Pressure Connection Size							
A - ⅛ NPT Female							A

Distribuidor Autorizado CALFER
CALFER DE MÉXICO®
CONTROLES AUTOMÁTICOS INDUSTRIALES
50 ANIVERSARIO
www.calfer.com.mx 01 800 0125 742 /CalferMx
soporte.tecnico2@calfer.com.mx

ASHCROFT®
Trust the shield.®

FEATURES

- Single or dual pressure measurement display
- Digital interface capability via RS232 interface
- Large LCD display
- Pressure modules permantly installed (PPT-1 and PPT-2)
- Pressure measurement accuracies of ±0.10% to ±0.025%, range dependent

SPECIFICATIONS

Accuracy:	Based on module accuracy. See coding on pages 218 and 219
Process Connection:	⅛ NPT internal
Calibration:	NIST traceable Cal Cert included
Recalibration:	Complete recalibration can be accomplished over instrument RS232 interface. Zero and span can be accomplished via front panel keypad.
Resolution:	±0.002% of span (max.)
Repeatability:	±0.01% of span (all psi ranges) ±0.01% of span (ranges of 1 through 200 inH_2O) ±0.02% of span (ranges below 1 inH_2O)
Temperature Effect:	±0.004% per °F from a reference temp. 70 ±3°F
Operating Temperature Range:	32°F to 120°F (0°C to 49°C)
Temperature Compensation Range:	20°F to 120°F (-7°C to 49°C)
Storage Temperature:	-4°F to 158°F (-20°C to 70°C)
Media:	PPM1: Sensor Type: Clean, dry, non-conductive, non-corrosive gas PPM2: Sensor Type: Any medium compatible with 316 SS
Overpressure:	IWC H_2O ranges 50 psi positive, 15 psi negative psi ranges 200% for ranges of 5 through 1,000 psi 150% for ranges of 1,500 psi and above
Display:	Liquid crystal
Case Material:	High Impact ABS, black
Power Requirements:	Standard: ac adapter provided for operation off standard 110 Vdc, 60 Hz supply

PT-1
Pressure Tester

ORDERING CODE	Example:	PM	2	L	N	P	R
Part Number							
PM - Ashcroft® base unit; no sensors		PM					
Power Supply							
1 - 110 Vac/60 Hz							
2 - 220 Vac/50 Hz			2				
3 - 100 Vac/60 Hz							
4 - No power supply provided							
Optional Features							
L - Back Lit display				L			
N - Nicad batteries					N		
A - Alkakine batteries							
H - Handle							
P - Panel mounting hardware						P	
R - Series 7 retrofit panel (option P will be required to mount this)							R
E - Non-standard engineering units							

Distribuidor Autorizado CALFER
CALFER DE MÉXICO®
CONTROLES AUTOMÁTICOS INDUSTRIALES
50 ANIVERSARIO
www.calfer.com.mx 01 800 0125 742 /CalferMx
soporte.tecnico2@calfer.com.mx

ORDERING CODE Example:	PPT	1	C	A	D	INWC/	100	A
Model								
PPT - Ashcroft pressure sensor	PPT							
Sensor Type								
1 - Capacitive sensor — Low pressure 25-200 inH_2O		1						
Sensor Accuracy								
B - ±0.1% Accuracy (STD.)								
C - ±0.06% Accuracy (STD.) (“C” accuracy is ±0.06% for ranges 1.0 inH_2O and higher)			C					
C - ±0.07% Accuracy (STD.) (“C” accuracy is ±0.07% for ranges below 0.5 inH_2O and bolded values in range table)								
Media Compatability								
A - Non-isolated sensor				A				
Pressure Type								
C - Compound								
D - Differential					D			
Pressure Units								
INWC						INWC/		
Ranges								
Differential								
0.25 - IWC (inH_2O)								
0.5 - IWC (inH_2O)								
1.0 - IWC (inH_2O)								
2.0 - IWC (inH_2O)								
3.0 - IWC (inH_2O)								
5.0 - IWC (inH_2O)								
10 - IWC (inH_2O)								
15 - IWC (inH_2O)								
25 - IWC (inH_2O)								
50 - IWC (inH_2O)								
100 - IWC (inH_2O)							100	
150 - IWC (inH_2O)								
200 - IWC (inH_2O)								
Compound								
0.125 - IWC (inH_2O)								
0.25 - IWC (inH_2O)								
0.50 - IWC (inH_2O)								
1.0 - IWC (inH_2O)								
1.5 - IWC (inH_2O)								
2.5 - IWC (inH_2O)								
5.0 - IWC (inH_2O)								
7.5 - IWC (inH_2O)								
12.5 - IWC (inH_2O)								
25 - IWC (inH_2O)								
50 - IWC (inH_2O)								
75 - IWC (inH_2O)								
100 - IWC (inH_2O)								
Inlet Fitting								
A - ⅛ NPT Internal								A

Distribuidor Autorizado CALFER
CALFER DE MÉXICO®
CONTROLES AUTOMÁTICOS INDUSTRIALES
50 ANIVERSARIO
www.calfer.com.mx 01 800 0125 742 /CalferMx
soporte.tecnico2@calfer.com.mx

ASHCROFT®
Trust the shield.®

ORDERING CODE Example:	PPT	2	C	I	G	PSI	100	A
Model								
PPT - Ashcroft pressure sensor	PPT							
Sensor Type								
2 - Piezoresistive sensor — High pressure 5 psi to10,000 psi		2						
Accuracy								
B - ±0.1% accuracy (STD.)								
C - ±0.05% accuracy (STD.)			C					
D - ±0.025% accuracy (STD.)								
F - ±0.1% Enhanced temperature compensation 20°F to 120°F								
G - ±0.05% Enhanced temperature compensation 20°F to 120°F								
H - ±0.025% Enhanced temperature compensation 20°F to 120°F								
Media Compatability								
I - Isolated (no special cleaning)				I				
O - Isolated, for oxygen service								
Pressure Type								
G - Gauge					G			
A - Absolute								
V - Vacuum								
C - Compound								
Pressure Units								
PSI						PSI		
Ranges								
Isolated								
5 - 5 psi								
10 - 10 psi								
15 - 15 psi								
20 - 20 psi								
25 - 25 psi								
30 - 30 psi								
50 - 50 psi								
60 - 60 psi								
100 - 100 psi							100	
150 - 150 psi								
200 - 200 psi								
250 - 250 psi								
300 - 300 psi								
500 - 500 psi								
600 - 600 psi								
1000 - 1,000 psi								
1500 - 1,500 psi								
2000 - 2,000 psi								
2500 - 2,500 psi								
3000 - 3,000 psi								
5000 - 5,000 psi								
6000 - 6,000 psi								
7500 - 7,500 psi								
10000 - 10,000 psi (gauge only)								
Vacuum, Piezo — psi								
15 - 15 psi								
Compound, Piezo — psi								
10 - ±10 psi								
15 - ±15 psi								
30 - ±30 psi								
60 - ±60 psi								
Inlet Fitting								
A - ⅛ NPT Female								A
B - ⅛ NPT Female w/flush port								
C - G ⅛ NPT British inlet manifold (STD.)								
D - G ⅛ NPT British inlet w/flush port (STD.)								

Distribuidor Autorizado CALFER
CALFER DE MÉXICO®
CONTROLES AUTOMÁTICOS INDUSTRIALES
50 ANIVERSARIO
www.calfer.com.mx 01 800 0125 742 /CalferMx
soporte.tecnico2@calfer.com.mx

ASHCROFT®
Trust the shield.®

FEATURES

- Lightweight and portable
- Vernier control, fine adjustment

SPECIFICATIONS	
Hoses:	(2) – 3′ lengths are supplied
Adapter Termination:	⅛ NPT Male & ¼ NPT Male adapters

Part Number	Description
DPPV-KIT	-23 inHg to 125 psi pressure range
APOV-KIT	0 to 300 psi pressure range (pneumatic)
XHOV-KIT	0 to 5,000 psi pressure range (hydraulic)
840X006-01	⅛ NPT adpater M
840X006-02	¼ NPT adpter M
840X006-03	⅛ NPT adpater F
840X006-04	¼ NPT adpter F
840X006-05	¼ tube fitting
840X007-01	Hose 3′
840X007-02	Hose 5′
856X034-01	Fitting kit includes 840X006-01, 02, 03, 04 & 05
856X027-01	Fitting kit includes: (2) ⅛ NPT Male x ⅛″ barb (1) ⅛ NPT Male x ⅛″ barbed tee (1) ⅛ NPT Male x ⅛ NPT Female tee (2) ⅛ NPT Male x ¼ NPT Female (2) ⅛ NPT Male x ⅛ NPT male
840A021-01	Outlet port, quick test, no cover, connects directly to pump body
840A022-01	Outlet port, quick test, with cover, connects directly to pump body

DPPV-KIT

APOV-KIT

XHOV-KIT

AVC Volume Controller

FEATURES

- Mechanical rotation is directly proportional to volume change due to piston travel
- Integral balance valve equalizes pressure and acts as pressure-relief valve
- Does not require compressed air source for low pressure

SPECIFICATIONS	
Pressure Connection:	⅛ NPT Female
Resolution	AVC-1000: 0.00025 AVC-3000: 0.0005
Operating Temperature:	20°F – 120°F
Mechanical Rotation (Total Turns):	AVC-1000: (31) AVC-3000: (61)
Pressure Ranges:	AVC-1000: Vacuum to 1,000 psi AVC-3000: Vacuum to 3,000 psi
Construction Material	Aluminum body, SS, Brass, Teflon®, Delrin®, and Buna-N®

AVC
1000 & 3000

ORDERING CODE
Model
AVC-1000
AVC-3000

Distribuid
CALFER DE MÉXICO®
CONTROLES AUTOMÁTICOS INDUSTRIALES
50 ANIVERSARIO
www.calfer.com.mx 01 800 0125 742 /CalferMx
soporte.tecnico2@calfer.com.mx

1305D & 1305DH Deadweight Tester

SPECIFICATIONS	
Accuracy:	±0.1% of reading
Operating Pressure:	15 psi to 10,000 psi
Reservoir Volume:	Approximately 1.5 pints
Pump Body Materials:	Aluminum alloy
Piston & Cylinder Materials:	Piston: 440C SS Cylinder: 416 SS
Operating Fluid:	1305D: SAE 20 automotive or machine oil 1305DH: Phosphate or glycol base hydraulic fluids, (Eastman Chemical-Skydrol® 500B-4 or equal)
Weight Material:	Non-magnetic die cast zinc alloy, ASTM AC41A
O-Ring Seals:	1305D: Buna-N® (STD.) 1305DH: Ethylene Propylene (OPT.)

1305D

1327CM & 1327D Pressure Gauge Comparator

SPECIFICATIONS	
Accuracy:	1327CM: ±0.1% of span 1327D: ±0.25% of span
Operating Pressure:	0 to 10,000 psi
Reservoir Volume:	Approximately 1.5 pints
Pump Body Materials:	Aluminum alloy
Piston & Cylinder Materials:	Piston: 440C SS Cylinder: 416 SS
Operating Fluid:	1327CMS: SAE 20 automotive or machine oil 1327CMH: Phosphate or glycol base hydraulic fluids 1327CMO: Distilled water (with sodium molybdate and phosphoric acid additives recommended as corrosion inhibitors) 1327D - SAE 20 automotive or machine oil 1327DH - Phosphate ester or Glycol based hydraulic fluids 1327DO - Distilled water (with sodium molybdate and phosphoric acid additives recommended as corrosion inhibitors)
Pressure Gauge Ranges:	1327CM & 1327D: 0 to 10,000 psi
O-Ring Seals:	1327CMS, 1327CMO, 1327D & 1327DO: Buna-N® (STD.) 1327CMH & 1327DH: Ethylene Propylene (OPT.)

1327 CM

1327D

ASHCROFT®
Trust the shield.®

ORDERING CODE - 1327CM Example:	1327CM	S	A B D
Model			
1327CM - Pressure gauge comparator	1327CM		
Media Designation (Choose 1)			
S - Standard Oil Services		S	
H - Hydraulic Services			
O - Oxygen Services			
Ranges (Choose 1, 2 or 3)			
X - No Gauges			
A - 0-30 psi			A
B - 0-100 psi			B
C - 0-150 psi			
D - 0-1,000 psi			D
E - 0-5,000 psi			
F - 0-10,000 psi			

See data sheet for additional ranges

ORDERING CODE - 1305D

MODEL NUMBER	PISTON ASSEMBLY PRESSURE RANGE		PISTON VALUE		NUMBERS OF WEIGHTS BY VALUE					APPROX. NET WEIGHT	
psi Type	Low	High	Low	High	L-5 H-25	L-10 H-50	L-20 H-100	L-40 H-200	L-100 H-500	lbs.	kg
1305D-10	15/200	75/1,000	5	25	1	3	2	3	–	60	27
1305D-20	15/400	75/2,000	5	25	1	3	2	3	2	70	32
1305D-30	15/600	75/3,000	5	25	1	3	2	3	4	85	39
1305D-50	15/1,000	75/5,000	5	25	1	3	2	3	8	105	48
1305D-100	15/2,000	75/10,000	5	25	1	3	2	3	18	175	80

ORDERING CODE - 1327D

UNIT OF MEASURE	MODEL NUMBER	GAUGE RANGES INCLUDED				NET WEIGHT lbs.	NET WEIGHT kg.
psig	1327DG-2	0/150	–	–	–	36	16
	1327DG-6	0/150	0/600	–	–	38	17
	1327DG-50	0/150	0/600	0/5,000	–	40	18
	1327DG-100	0/150	0/600	0/5,000	0/10,000	42	19
kg/cm²	1327DMG-10	0/10	–	–	–	36	16
	1327DMG-40	0/10	0/40	–	–	38	17
	1327DMG-250	0/10	0/40	0/250	–	40	18
	1327DMG-600	0/10	0/40	0/250	0/600	42	19
bar	1327DBG-10	0/10	–	–	–	36	16
	1327DBG-40	0/10	0/40	–	–	38	17
	1327DBG-250	0/10	0/40	0/250	–	40	18
	1327DBG-600	0/10	0/40	0/250	0/600	42	19
kPa	1327DAG-1,000	0/1,000	–	–	–	36	16
	1327DAG-4,000	0/1,000	0/4,000	–	–	38	17
	1327DAG-25,000	0/1,000	0/4,000	0/25,000	–	40	18
	1327DAG-60,000	0/1,000	0/4,000	0/25,000	0/60,000	42	19

Distribuidor Autorizado CALFER
CALFER DE MÉXICO®
CONTROLES AUTOMÁTICOS INDUSTRIALES
50 ANIVERSARIO
www.calfer.com.mx 01 800 0125 742 /CalferMx
soporte.tecnico2@calfer.com.mx

ACCESSORIES

Siphons

1198 222

1098 & 1100 223

Dampener/Snubbers

1106 & 1112 224

Valves/Pressure Limiting Valves

Gauge Valve-V01 & V02 225

2 Valve Manifold-V01 & V02 226

3 Valve Manifold-V01, V02 & V03 227

5 Valve Manifold-V01, V02 & V03 228

Low Pressure Ball Valve-V02 229

High Pressure Ball Valve-V02 230

Multiport Valve-V02 231

Pressure Limiting Ball Valve-PL02 232

Capillary Lines

1115A & 1115P 233

Gauge Cocks

1092, 1094 & 1095 234

Electric Contacts

2265 234

Steel Needle Valve

7001L & 7004L 235

1198 Finned Siphon

ASHCROFT®
Trust the shield.®

FEATURES

- For pressure ratings up to 3,000 psi
- For process temperature ratings to 700°F (371°C)
- Compatible with many process media
- For use with gauges, switches, transducers and diaphragm seals

1198
Finned Siphon

SPECIFICATIONS

Process Conn:	¼ NPT Male, ½ NPT Male
Instrument Conn:	¼ NPT Female, ½ NPT Female
Materials:	316L SS, Monel®
Max Allowable Working Pressure:	3,000 psi at 700°F (371°C)

ORDERING CODE Example:	04	1198	SS	50	XC3
Process Connection					
02 - ¼ NPT Male (available with (25) ¼ NPT Female instrument connection only)					
04 - ½ NPT Male (available with (50) ½ NPT Female instrument connection only)	04				
Model					
1198 - Finned siphon		1198			
Material					
SS - 316L SS			SS		
PM - Monel® (Monel design does not include built-in dampening mechanism)					
Instrument Connection					
25 - ¼ NPT Female					
50 - ½ NPT Female				50	
Options (if choosing an option(s) must include an "X")					X _ _
F3 - Instrument Assembly: pressure gauge, diaphragm seal, siphon					
NH - SS tag wired to siphon					
6B - Cleaned for oxygen service					
6W - Cleaned for oxidizing process other than oxygen					
C3 - Material Traceability report per EN 10204.2004 3.1					C3
5G - Siphon attached to instrument					

Distribuidor Autorizado CALFER
CALFER DE MÉXICO®
CONTROLES AUTOMÁTICOS INDUSTRIALES
50 ANIVERSARIO
www.calfer.com.mx 01 800 0125 742 /CalferMx
soporte.tecnico2@calfer.com.mx

ASHCROFT®
Trust the shield.®

FEATURES

- When live steam is present in the process
- Rigid design for direct mounting
- Used to condense hot vapors

1100
Pig Tail Siphon

1098
Coil Type Siphon

SPECIFICATIONS

Process Conn:	1098: ¼ NPT Male, ½ Male 1100: ¼ NPT Male
Instrument Conn:	1098: ¼ NPT Male, ½ NPT Male, ¼ NPT Female, ½ NPT Female 1100: ¼ NPT Male
Wetted Materials:	1098: Steel, brass, SS 1100: Steel, brass, SS
Max Allowable Working Pressure:	1098: 9550 psi at 400°F (204°C) 1100: 500 psi at 400°F (204°C)

ORDERING CODE

Example:	25	1098	S	02	X5G

Process Connection				
25 - ¼ NPT Male connection				25
50 - ½ NPT Male connection				
Model				
1098 Coil pipe				1098
1100 Pig tail				
Material	**MAWP**	**Pipe Schedule**		
I - Black steel pipe (1098 6½″ or 1100 6⅜″ long)	500 psi @ 400°F	40		
IL - Black steel pipe 8″ long (1100 only)	500 psi @ 400°F	40		
IN - Black steel pipe angle (1100 only)	500 psi @ 400°F	40		
B - Brass (1098 6½″ or 1100 5⅜″ long)	250 psi @ 400°F	40		
BL - Brass 8″ (1100 only)	250 psi @ 400°F	40		
A - SS (1100 only)	500 psi @ 400°F	40		
S - ASTM A-106 seamless steel, Grade A (1098 only)	338 psi @1,000°F to 3,360 psi from -20°F to 400°F	80	S	
SD - ASTM A-106 seamless steel, Grade A (1098 only w/½ NPT)	420 psi @1,000°F to 3,740 psi from -20°F to 400°F	160		
CD - ASTM A-213 seamless steel, Grade T 22 (1098 only w/½ NPT)	1,048 psi @1,200°F to 9,550 psi from -20°F to 400°F	XXS		
NS - Seamless SS, Type 316 (1098 only w/½ NPT)	294 psi @1,500°F to 3,981 psi from -20°F to 100°F	80		
ND - Seamless SS, Type 316 (1098 only w/½ NPT)	336 psi @1,500°F to 5,840 psi from -20°F to 100°F	160		
Instrument Connection				
02 - ¼ NPT Male				02
04 - ½ NPT Male				
25 - ¼ NPT Female				
50 - ½ NPT Female				
Options (if choosing an option(s) must include an "X")				X _ _
5G - Siphon attached to instrument				5G
NH - SS tag wired to siphon				

For heat dissapation chart information see datasheet

Distribuidor Autorizado CALFER
CALFER DE MÉXICO®
CONTROLES AUTOMÁTICOS INDUSTRIALES
50 ANIVERSARIO
www.calfer.com.mx 01 800 0125 742 /CalferMx
soporte.tecnico2@calfer.com.mx

ASHCROFT®
Trust the shield.®

FEATURES: 1106

- Horizontal or vertical Installation
- Self-cleaning
- Select field-adjusment for meeting requirements

FEATURES: 1112

- All metal construction
- Select porosity settings
- Filter disk, less tendency to clog than orifice type device

SPECIFICATIONS: 1106	
Process Conn:	¼ NPT Male, ½ NPT Male
Instrument Conn:	¼ NPT Female, ½ NPT Female
Wetted Materials:	1106B: Brass/316 SS 1106D: Steel/SS 1106S: SS
Max Allowable Working Pressure:	5,000 psi

SPECIFICATIONS: 1112	
Process Conn:	¼ NPT Male, ½ NPT Male
Instrument Conn:	¼ NPT Female, ½ NPT Female
Wetted Materials:	1112B: Brass/316 SS 1112S: 303 SS/316 SS 1112M: R Monel®/Monel®
Max Allowable Working Pressure:	1112B: 10,000 psi 1112S & 1112M: 15,000 psi

1112
Snubber

1106
Pulsation Dampener

ORDERING CODE:	Example:	02	1112	S	D	25	X5G
Process Connection							
02 - ¼ NPT Male		02					
04 - ½ NPT Male							
Model							
1106 - Pulsation dampener							
1112 - Pressure snubber			1112				
Housing Material							
B - Brass							
S - 303 SS				S			
D - Steel (1106 only)							
M - R Monel® (1112 only)							

Porosity	Max. Pore Capacity	CFH at 1 psi Diff. Pressure	For use with (For 1112 only)	
D	0.005	6.5	Oil	D
E	0.0025	3.0	Water & Light Oils	
G	0.0008	1.1	Air, Steam & Gases	
HX	0.0006	0.4	Mercury Manometers	

Instrument Connection							
25 - ¼ NPT Female						25	
50 - ½ NPT Female							
Options (if choosing an option(s) must include an "X")							X _ _
5G - Siphon attached to instrument							5G
NH - SS tag wired to snubber/dampener							

Distribuido
CALFER DE MÉXICO®
CONTROLES AUTOMÁTICOS INDUSTRIALES
50 ANIVERSARIO
www.calfer.com.mx 01 800 0125 742 /CalferMx
soporte.tecnico2@calfer.com.mx

ASHCROFT®
Trust the shield.®

FEATURES

- Isolates process from instrument assembly
- Externally adjustable gland (V01 only)
- Blowout protection (V01 only)
- Non-rotating needle provides bubble tight shut-off (V01 only)

V01
Style A

SPECIFICATIONS

Process Conn:	½ NPT Male, ½ NPT Female
Instrument Conn:	½ NPT Female
Construction:	316 SS
Max Pressure/Temp. Rating:	6,000 psi (414 bar) at 100°F (38°C) (V01) 6,092 psi (420 bar) at 140°F (60°C)
Max Temperature Rating:	392°F (200°C) at 1,305 psi (V02)

COMPONENTS	V01	V02
Wetted:	316 SS/316L SS with PTFE Packing	316 SS/316L SS with PTFE Packing
Non-Wetted:	304 SS/316 SS	316 SS

V01
Style B (with vent plug)

V02
Style A

ORDERING CODE:	Example:	04	V02	1VA	SS	50	XC3
Process Connection							
04 - ½ NPT Male (for V01 style A&B and V02)		04					
50 - ½ NPT Female							
Series Code							
V01 - Valve							
V02 - Valve			V02				
Valve Style							
1VA - 1 Valve Style A (V01)				1VA			
1VB - 1 Valve Style B (V01) (with vent plug)							
A - Style A (V02)							
B - Style B (V02) (with vent plug)							
Material							
SS - 316 SS					SS		
Instrument Connection							
50 - ½ NPT Female						50	
Options (if choosing an option(s) must include an "X")							X _ _
C3 - Material traceability report per EN 10204 3.1 (available only for V02)							C3
6B - Cleaned for oxygen service							
P7 - Compliance with power piping ASME B31.1							
HY - Hydrostatic testing							
NH - SS tag wired to gauge valve							
5G - Valve attached to instrument							

Distribu
CALFER DE MÉXICO®
CONTROLES AUTOMÁTICOS INDUSTRIALES
50 ANIVERSARIO
www.calfer.com.mx 01 800 0125 742 /CalferMx
soporte.tecnico2@calfer.com.mx

ASHCROFT®
Trust the shield.®

FEATURES

- Isolates and bleeds process from instrument assembly
- Externally adjustable gland and blowout protection (V01 only)
- Reinforced gland body protection
- Non-rotating needle provides bubble tight shut-off

V01
2 Valve Manifold

V02
Style A (inline)

SPECIFICATIONS	
Process Conn:	V01: ½ NPT Male, ½ NPT Female V02: ½ NPT Male (style A), ½ NPT Female (styles B & C)
Instrument Conn:	½ NPT Female
Construction:	316 SS
Max Pressure/Temp. Rating:	V01: 6,000 psi (414 bar) at 100°F (38°C) V02: 6,092 psi at 140°F (60°C)
Max. Temperature Rating:	V02: 392°F (200°C) at 1,305 psi

COMPONENTS	V01	V02
Wetted:	316 SS/316L SS with PTFE Packing	316 SS/316L SS with PTFE Packing
Non-Wetted:	304 SS/316 SS	316 SS

ORDERING CODE Example:	04	V01	2VA	SS	50	XP7
Process Connection						
04 - ½ NPT Male (available for V01 & style A for V02)	04					
50 - ½ NPT Female						
Series Code						
V01 - Valve		V01				
V02 - Valve						
Valve Style						
2VA - Valve style A (V01 only)			2VA			
A - Style A (In-line) (V02 only)						
B - Style B (L-Shape) (V02 only)						
C - Style C (Y-Shape) (V02 only)						
2V - 2 Valve (V02 only)						
Material						
SS - 316 SS				SS		
Instrument Connection						
50 - ½ NPT Female					50	
Options (if choosing an option(s) must include an "X")						X_ _
C3 - Material traceability report per EN 10204 3.1 (available only for V02)						
6B - Cleaned for oxygen service						
P7 - Compliance with power piping ASME B31.1						P7
HY - Hydrostatic testing						
NH - SS Tag wired to manifold						
5G - Valve attached to instrument						

Distribuidor Autorizado CALFER
CALFER DE MÉXICO®
CONTROLES AUTOMÁTICOS INDUSTRIALES
50 ANIVERSARIO
www.calfer.com.mx 01 800 0125 742 /CalferMx
soporte.tecnico2@calfer.com.mx

ASHCROFT®
Trust the shield.®

FEATURES

- 3-valve manifolds isolate each port and equalize pressure for instrument maintenance
- Non-rotating needle tip
- Blowout protection
- Available with PTFE (standard) or graphite packing

SPECIFICATIONS

Process Conn:	½ NPT Female ¼ NPT Female (V03 for 1132/1133 gauges only)
Instrument Conn:	V01: Remote Mount: ½ NPT Female V02: Remote Mount: ½ NPT Female V02: Direct Mount: IEC, Type A V03: Remote Mount ¼ NPT Female V03: Direct Mount ¼ - ½ swivel nut adaptors
Construction:	316 SS
Max Pressure Rating (PTFE):	V01: 6,000 psi at 100°F (38°C) V02: 6,092 psi at 140°F (60°C) V03: 6,000 psi at 100°F (38°C)
Max Temperature Rating (PTFE):	V01: 6,000 psi at 100°F (38°C) V02: 392°F (200°C) V03: 6,000 psi at 100°F (38°C)

COMPONENTS	V01/ V03	V02
Wetted:	316 SS/316L SS with PTFE Packing	316 SS/316L SS with PTFE Packing
Non-Wetted:	304 SS/316 SS	316 SS

V01
3-Valve Manifold

V02 Style A
3-Valve Manifold
(Direct mount)

V03
3-Valve Manifold
(Direct mount)

ORDERING CODE Example:	50	V02	3VA	SS	50	XP7
Process Connection						
25 - ¼ NPT Female (V03 only)						
50 - ½ NPT Female	50					
Series Code						
V01 - V01 Series valve						
V02 - V02 Series valve		V02				
V03 - V03 Series valve (compatible with 1132 & 1133 gauges)						
Valve Style						
3VA - Style A - Direct (V02 compatible with 5503. V03 compatiable with 1132 & 1133 gauges only)			3VA			
3VB - Style B - Remote						
Material						
SS - 316 SS				SS		
Instrument Connection						
25 - ¼ NPT Female (instrument connection sized for 1132 & 1133 gauges)						
50 - ½ NPT Female					50	
60 - IEC Type A (Style A only)						
86 - Direct Mount 1132 & 1133 gauges only (¼ - ½ swivel nut adaptors)						
Options (if choosing an option(s) must include an "X")						X _ _
C3 - Material traceability report per EN 10204 3.1						C3
HY - Hydrostatic test certificate						
6B - Cleaned for oxygen service						
NH - SS Tag wired to manifold						
P7 - Compliance with power piping ASME B31.1(includes graphite packing) (V02 only)						
5G - Valve attached to instrument						
2G - Graphite packing						

Distribu
CALFER DE MÉXICO®
CONTROLES AUTOMÁTICOS INDUSTRIALES
50 ANIVERSARIO
www.calfer.com.mx 01 800 0125 742 /CalferMx
soporte.tecnico2@calfer.com.mx

ASHCROFT®
Trust the shield.®

FEATURES

- 5-valve manifolds isolate and bleed the process for each port as well as equalize pressure for instrument maintenance
- Non-rotating needle tip
- Blowout protection
- Available with PTFE (standard) or Graphite packing

V01
5-Valve Manifold

V02 Style A
5-Valve Manifold
(Direct mount)

V03
5-Valve Manifold
(Direct mount)

SPECIFICATIONS

Process Conn:	½ NPT Female ¼ NPT Female (V03 for 1132/1133 gauges only)
Instrument Conn:	V01: Remote Mount: ½ NPT Female V02: Remote Mount: ½ NPT Female V02: Direct Mount: IEC, Type A V03: Remote Mount ¼ NPT Female V03: Direct Mount ¼ - ½ swivel nut adaptors
Construction:	316 SS
Max Pressure/Temp. Rating (PTFE):	V01: 6,000 psi at 100°F (38°C) V02: 6,092 psi at 140°F (60°C) V03: 6,000 psi at 100°F (38°C)
Max Temperature Rating (PTFE):	V01: 100°F (38°C) V02: 392°F (200°C) V03: 100°F (38°C)

COMPONENTS	V01/ V03	V02
Wetted:	316 SS/316L SS with PTFE Packing	316 SS/316L SS with PTFE Packing
Non-Wetted:	304 SS/316 SS	316 SS

ORDERING CODE	Example:	50	V01	5VB	SS	50	XNH
Process Connection							
25 - ¼ NPT Female (V03 only)							
50 - ½ NPT Female		50					
Series Code							
V01 - V01 Series valve			V01				
V02 - V02 Series valve							
V03 - V03 Series valve (1132/1133 gauges only)							
Valve Style							
5VA - Style A - Direct (V02 compatible with 5503. V03 compatible with 1132 & 1133 gauges only)				5VB			
5VB - Style B - Remote							
Material							
SS - 316 SS					SS		
Instrument Connection							
25 - ¼ NPT Female (instrument connection sized for 1132 & 1133 gauges)							
50 - ½ NPT Female						50	
60 - IEC Type A (style A only)							
86 - Direct Mount 1132 & 1133 gauges only (¼ - ½ swivel nut adaptors)							
Options (if choosing an option(s) must include an "X")							X _ _
C3 - Material traceability report per EN 10204 3.1							
HY - Hydrostatic test certificate							
6B - Cleaned for oxygen service							
NH - SS Tag wired to manifold							NH
P7 - Compliance with power piping ASME B31.1(includes graphite packing) (V02 only)							
5G - Valve attached to instrument							
2G - Graphite packing							

Distribuid
CALFER DE MÉXICO®
CONTROLES AUTOMÁTICOS INDUSTRIALES
50 ANIVERSARIO
www.calfer.com.mx 01 800 0125 742 /CalferMx
soporte.tecnico2@calfer.com.mx

ASHCROFT®
Trust the shield.®

FEATURES

- Floating ball design provides bi-directional isolation
- PTFE Packing (other materials available upon request)
- Anti-blowout stem design
- Supplied with wetted parts according to NACE MR0175/MR0103

V02
Low Pressure Ball Valve

SPECIFICATIONS	
Process Conn:	½ NPT Female
Instrument Conn:	½ NPT Female
Construction:	316 SS
Max Pressure Rating:	1,000 psi
Max Temperature Rating:	392°F (200°C)

COMPONENTS	Material
Wetted	
Body	316L SS
Ball	316L SS
Cap	316L SS
Stem	316 SS
Ball seat	PTFE
Thrust washer & Packing	PTFE
Non-Wetted	
Washer & Spring Washer	304 SS
Handle grip	Vinyl
Hex nut & Handle	304 SS
Locking Plate	304 SS

ORDERING CODE	Example:	50	V02	BV	B	SS	50	XHY
Process Connection								
50 - ½ NPT Female		50						
Series Code								
V02 - Valve			V02					
Valves								
BV - Ball valve				BV				
Style								
B - Style B					B			
Material								
SS - 316 SS						SS		
Instrument Connection								
50 - ½ NPT Female							50	
Options (if choosing an option(s) must include an "X")								X_ _
6B - Cleaned for oxygen service								
HY - Hydrostatic testing								HY
NH - SS Tags wired to gauge valve								
5G - Valve attached to instrument								

Distribuidor Autorizado CALFER
CALFER DE MÉXICO®
CONTROLES AUTOMÁTICOS INDUSTRIALES
50 ANIVERSARIO
www.calfer.com.mx 01 800 0125 742 /CalferMx
soporte.tecnico2@calfer.com.mx

ASHCROFT®
Trust the shield.®

FEATURES

- Floating ball design provides bi-directional isolation
- PTFE Packing (other materials available upon request)
- Anti-blowout stem design
- Supplied with wetted parts according to NACE MR0175/MR0103

SPECIFICATIONS

Process Conn:	½ NPT Female or ½ NPT Male
Instrument Conn:	½ NPT Female
Construction:	316 SS
Max Pressure Rating:	6,092 psi
Max Temperature Rating:	347°F (175°C)

COMPONENTS	MATERIAL
Wetted	
Body & Ball and stem	316/316L SS
Body end connector	316/316L SS
Ball seat & body seals	PTFE
Stem seals	PTFE
Non-Wetted	
Gland, hex nut, handle	316 SS
Handle grip	Vinyl
Stop pin	A4
Antistatic spring	316 SS

V02
High Pressure Ball Valve

ORDERING CODE Example:	50	V02	BV	A	SS	50	XHY
Process Connection							
04 - ½ NPT Male							
50 - ½ NPT Female	50						
Series Code							
V02 - Valve		V02					
Valves							
BV - Ball valve			BV				
Style							
A - Style A high pressure				A			
Material							
SS - 316 SS					SS		
Instrument Connection							
50 - ½ NPT Female (style B only)						50	
Options (if choosing an option(s) must include an "X")							X _ _
C3 - Material traceability report per EN 10204 3.1 (high pressure only)							
6B - Cleaned for oxygen service							
HY - Hydrostatic testing							HY
NH - SS Tags wired to valve							
5G - Valve attached to instrument							

Distribuid
CALFER DE MÉXICO®
CONTROLES AUTOMÁTICOS INDUSTRIALES
50 ANIVERSARIO
www.calfer.com.mx 01 800 0125 742 /CalferMx
soporte.tecnico2@calfer.com.mx

ASHCROFT®
Trust the shield.®

FEATURES

- Isolates process from instrument assembly
- Connects multiple instruments to one isolation valve
- 316L SS Construction
- Pipe plugs and vent plugs available
- Support mounting brackets available

SPECIFICATIONS

Process Conn:	½ NPT Male or ½ NPT Female
Instrument Conn:	½ NPT Female
Construction:	316 SS
Max Pressure Rating (PTFE):	6,092 psi at 140°F (60°C)
Max Temperature Rating (PTFE):	392°F (200°C) at 1,305 psi

COMPONENTS	MATERIAL
Wetted	
Body & Valve Stem	316L SS
Needle Tip	316Ti SS
Packing	PTFE up to 392°F (200°C)
Gland Nut	316 SS
Non-Wetted	
Bonnet	316 SS
T-Handle	SS

V02
Multiport Valves

ORDERING CODE Example:	50	V02	MV	A	SS	50	XC3
Process Connection							
04 - ½ NPT Male							
50 - ½ NPT Female	50						
Series Code							
V02 - Valve		V02					
Valves							
MV - Multiport valve			MV				
Style							
A - Style A				A			
Material							
SS - 316 SS					SS		
Instrument Connection							
50 - ½ NPT Female						50	
Options (if choosing an option(s) must include an "X")							X _ _
C3 - Material traceability report per EN 10204 3.1							C3
HY - Hydrostatic testing							
6B - Cleaned for oxygen service							
NH - SS Tags wired to valve							
5G - Valve attached to instrument							

Distribu
CALFER DE MÉXICO®
CONTROLES AUTOMÁTICOS INDUSTRIALES
50 ANIVERSARIO
www.calfer.com.mx 01 800 0125 742 /CalferMx
soporte.tecnico2@calfer.com.mx

ASHCROFT®
Trust the shield.®

FEATURES

- Protects instrument assembly from severe pressure spikes
- Prevents damage, loss of accuracy and/or rupture of gauge, switch or transducer
- 316Ti SS construction

SPECIFICATIONS

Process Conn:	¼ NPT Male, ½ NPT Male
Instrument Conn:	¼ NPT Female, ½ NPT Female
Construction:	316Ti SS
Max Pressure Rating:	14,500 psi
Max Temperature Rating FKM (FPM by ISD):	175°F (80°C)

COMPONENTS	MATERIAL
Wetted	
Body	316L SS
Valve stem	316L SS
Needle tip	316Ti SS
Piston seal	FKM (equivalent to FPM by ISO) up to 175°F (80°C)
Gland nut	304 SS
Screw plug	316L SS

PL02
Pressure Limiting Valve

ORDERING CODE

Example:	04	PL02	A	ST	50	0100#	XC3
Process Connection							
04 - ½ NPT Male	04						
02 - ¼ NPT Male							
Series Code							
PL02 - Valve		PL02					
Style (set point) **psi** **bar/KSG**							
A - Style A 6-36 0.4-2.5			A				
B - Style B 30-85 2-6							
C - Style C 75-360 5-25							
D - Style D 300-850 20-60							
E - Style E 750-3,600 50-250							
F - Style F 3,500-5,800 240-400							
G - Style G (¼" only) 5,800-8,700 400-600							
Material							
ST - 316Ti SS				ST			
Instrument Connection							
50 - ½ NPT Female					50		
25 - ¼ NPT Female							
Factory Set Range (4-digit)							
0100# – 100 psi						0100#	
Options (if choosing an option(s) must include an "X")							X _ _
C3 - Material traceability report per EN 10204 3.1							C3
HY - Hydrostatic testing							
6B - Cleaned for oxygen service							
NH - SS Tags wired to valve							
5G - Valve attached to instrument							

Distribuid
CALFER DE MÉXICO®
CONTROLES AUTOMÁTICOS INDUSTRIALES
50 ANIVERSARIO
www.calfer.com.mx 01 800 0125 742 /CalferMx
soporte.tecnico2@calfer.com.mx

ASHCROFT®
Trust the shield.®

FEATURES

- All welded SS construction
- 5´ length (standard); alternate lengths in 5´ increments
- Dissipates process temperature
- Dampens pressure pulsation
- Used to remote mount instrument when process vibration is present

SPECIFICATIONS

Process Conn:	¼ NPT Male, ½ NPT Male
Instrument Conn:	¼ NPT Female, ½ NPT Female
Line Length:	1´ minimum up to 100´ maximum
Max Allowable Working Pressure:	10,000 psi
Temperature Limits:	-300°F to 750°F (-184°C to 399°C)
Wetted Materials:	304 SS
Outer Diameter:	0.125˝
Inner Diameter:	0.062˝

1115A
Armored Capilllary Line

1115P
Armored Capilllary Line w/PVC sheating

ORDERING CODE

Example:	04	1115A	25	005
Process Connection				
02 - ¼ NPT Male				
04 - ½ NPT Male	04			
25 - ¼ NPT Female				
50 - ½ NPT Female				
Model				
1115A Standard armored capillary		1115A		
1115P Armored capillary w/PVC sheathing				
Instrument Connection				
25 - ¼ NPT Female			25	
50 - ¼ NPT Female				
Length in Increments of Feet				
001 - 1´				
005 - 5´				005
025 - 25´				
100 - 100´				

Distribu
CALFER DE MÉXICO®
CONTROLES AUTOMÁTICOS INDUSTRIALES
50 ANIVERSARIO
www.calfer.com.mx 01 800 0125 742 /CalferMx
soporte.tecnico2@calfer.com.mx

1092, 1094, 1095 Gauge Cocks

FEATURES

- Easy flow adjustment (for air only)
- Rated 100 psi air

SPECIFICATIONS	
Models:	1092 tee handle 1094 lever handle union 1095 lever handle
Process/Instrument Connection:	¼ NPT Female
Material:	Brass
Max Allowable Working Pressure:	100 psi (air only)

ORDERING CODE:	Example:	25	1092
Process/Instrument Connection			
25 - ¼ NPT Female		25	
Model			
1092			1092
1094			
1095			

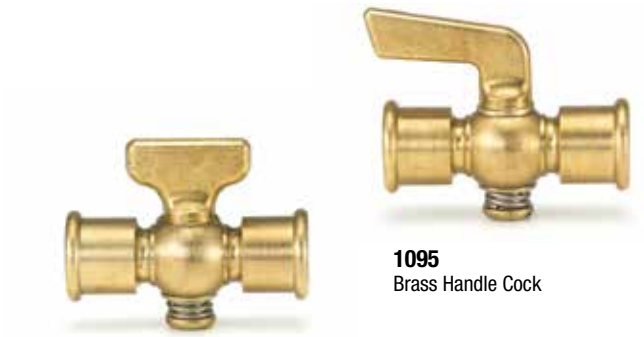

1095
Brass Handle Cock

1092
Brass Handle Tee Cock

1094
Brass Handle Union Cock

2265 Electric Warning Contacts

FEATURES

- Field-adjustable; settings and circuit
- Select contact arrangements
- Equipped with adjustable magnets to eliminate chatter caused by vibration

SPECIFICATIONS	
Dial Size:	4½″ and 6″
Electrical Contact:	250V maximum voltage
Switching Capacity:	30W dc maximum switch power 50VA ac maximum switching power 1A maximum current
Easy Installation On:	Pressure gauges: 1009, 1279, 1377,1379, 1125,1127 Duratemp® thermometers: 600A-02, 600-03 and 600-04

ORDERING CODE	Example:	45	2265	XED
Dial Size				
45 - 4½″		45		
60 - 6″				
Model				
2265			2265	

Code	Contact Arrangements	
XED	High and low contact	XED
XEE	Double high contact	
XEF	Double low contact	
XEG	“OFF” at low and high, and “ON” in between	
XIC	Single High or Low	

2265
Electric Warning Contact

Distribuidor Autorizado CALFER
CALFER DE MÉXICO®
CONTROLES AUTOMÁTICOS INDUSTRIALES
50 ANIVERSARIO
www.calfer.com.mx 01 800 0125 742 /CalferMx
soporte.tecnico2@calfer.com.mx

7001L & 7004L Steel Needle Valve

ASHCROFT®
Trust the shield.®

FEATURES

- Adjustable throttling device
- Varying the orifice to determine the exact orifice for any specific service condition

7004L
Needle Valve

SPECIFICATIONS	
Models:	7001L 7004L
Process/Instrument Connection:	¼ NPT Female ½ NPT Female
Material:	Carbon steel or 316 SS

PRESSURE RATINGS

Model	Material	100°F	550°F	850°F	1,000°F
25-7001L	Carbon steel with 12-14% chrome	10,000 psi	7,735 psi		
50-7001L	SS stem				
25-7004L	316 SS	7,000 psi	4,500 psi	3,895 psi	3,535 psi
50-7004L					

ORDERING CODE	Example:	25	7004L
Process/Instrument Connection			
25 - ¼ NPT Female		25	
50 - ½ NPT Femaie			
Model			
7001L			
7004L			7004L

Distribuidor Autorizado CALFER
CALFER DE MÉXICO®
CONTROLES AUTOMÁTICOS INDUSTRIALES
50 ANIVERSARIO
www.calfer.com.mx 01 800 0125 742 /CalferMx
soporte.tecnico2@calfer.com.mx

Distribuidor Autorizado CALFER

CALFER DE MÉXICO®

CONTROLES AUTOMÁTICOS INDUSTRIALES

50 ANIVERSARIO

www.calfer.com.mx 01 800 0125 742 /CalferMx

soporte.tecnico2@calfer.com.mx

ASHCROFT®

Trust the shield.

All specifications are subject to change without notice. All sales subject to standard terms and conditions.
©2018 Ashcroft Inc. Ash Bul OH-2 20M

Distribuidor Autorizado CALFER

CALFER DE MÉXICO®
CONTROLES AUTOMÁTICOS INDUSTRIALES

50 ANIVERSARIO

www.calfer.com.mx 01 800 0125 742 /CalferMx

soporte.tecnico2@calfer.com.mx